YAMAHA

PARTS CATALOGUE

YFM7FGPHB (1HP5) U.S.A.

1L1HP-110EA

( )

YAMAHA GENUINE Parts & Accessories

YFM7FGPHB
PARTS CATALOGUE
©2011 by Yamaha Motor Co., Ltd.
1st edition, May 2011
All rights reserved.
Any reprinting or unauthorized use
without the written permission of
Yamaha Motor Co., Ltd.
is expressly prohibited.
Printed in Japan.

FOREWORD

This Parts Catalogue is related to the parts for the model(s) on the cover page. When you are ordering replacement parts, please refer to this Parts Catalogue and quote both part numbers and part names correctly.

1. Modifications or additions which have been made after the issue of the Parts Catalogue will be announced in the Parts News.
   It is advisable that you make the necessary corrections to the Parts Catalogue according to the Parts News.

2. Abbreviations
   The following abbreviations are used in this Parts Catalogue.

   “UR” Use specified parts number.
   “UN” Use as many as needed.
   “AP” Alternate Parts
   “LM” Locally Made (Parts need to be ordered locally)
   “F#” Frame No. (Applicable machine No.)
   “O/S” Over Size

3. The number of components for assembly
   - Parts, which are to be supplied in an assembly, are listed with a dot (.) in front of the part name as shown below.
   - The numeral appearing to the right of each component part indicates the quantity of parts for each assembly unit.

PART NO.	DESCRIPTION	Q’TY	REMARKS
2F5–83310–60	FRONT FLASHER LIGHT ASSY	2	
115–83311–60	.BULB (6V–18W)	1	

4. Applicable colours of graphics are represented in the “REMARKS” as shown below.

PART NO.	DESCRIPTION	Q’TY	REMARKS
2N4–24110–00–X5	FUEL TANK COMP.	2	MXR
3J1–24240–10	.GRAPHIC, FUEL TANK	1	FOR MXR

5. Note that the illustrations for reference in finding parts numbers are not to be used for assembling. When assembling, please use the applicable service manual.

6. The asterisk (*) before a reference number indicates modified items after the first edition.

7. Applicable Serial No.

Engine Serial No.

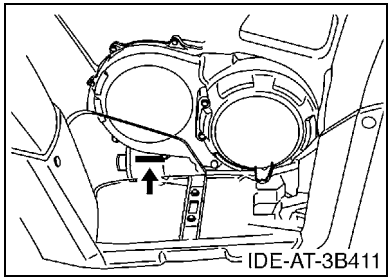

Frame Serial No.

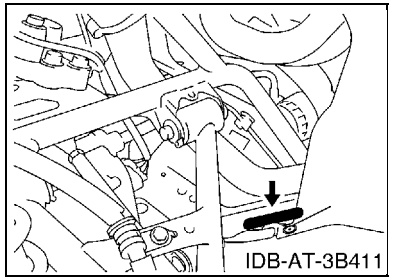

8. Applicable Colour Code (The (*) mark shows Model colour.)

Abbreviation	Colour Name	Colour Code
YB(*)	YAMAHA BLACK	0033

9. Quantity Column Information

Column No.	Name Of Q’ty Column	Destination
1	USA	U.S.A.

MODEL LABEL

(1) A label called “Model Label” is affixed in the location as indicated in (3) below. When using this parts catalogue, please be sure to cross–reference the “model code – production code No.” in the catalogue with the “model code – production code No.” indicated on the Model Label affixed onto the product concerned.

(2) “Model Label” Indication

a b ○ xxxx – xxx ● x c	a: Model Type Code b: Production Code No. c: Colouring Type

○ 4TW1–010 ● A

(3) Model Label Affixing Location

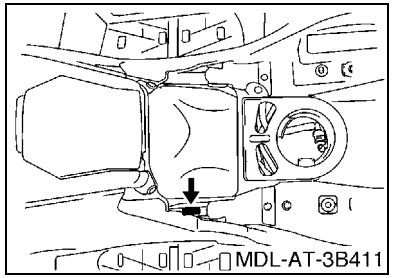

(4) Colouring Information

Model Code	Colouring Type Code	Colour Code	Colour Name	Abbreviation
1HP5	R	0033	YAMAHA BLACK	YB

(5) Model Code – Production Code Number of Model Listed in This Parts Catalogue

Model Code	Production Code No.	Country (destination)	Model Code	Production Code No.	Country (destination)
1HP5	010	U.S.A.			

CONTENTS

ENGINE

CYLINDER HEAD 1
CYLINDER 2
CRANKSHAFT & PISTON 3
VALVE 5
CAMSHAFT & CHAIN 6
WATER PUMP 7
RADIATOR & HOSE 8
OIL PUMP 9
INTAKE 10
THROTTLE BODY ASSY 1 11
EXHAUST 12
CRANKCASE 14
CRANKCASE COVER 1 15
STARTER CLUTCH 17
CLUTCH 18
TRANSMISSION 20
MIDDLE DRIVE GEAR 22
SHIFT CAM & FORK 24
SHIFT SHAFT 26

CHASSIS

FRAME 28
FRONT FENDER 30
REAR FENDER 33
SIDE COVER 34
REAR ARM 36
REAR SUSPENSION 37
DRIVE SHAFT 38
FRONT DIFFERENTIAL 41
STEERING 43
FRONT SUSPENSION & WHEEL 45
FUEL TANK 46
SEAT 48
FRONT WHEEL 49
FRONT WHEEL 2 51
FRONT BRAKE CALIPER 53
REAR WHEEL 55
REAR WHEEL 2 57
REAR BRAKE CALIPER 59
STEERING HANDLE & CABLE 61
FRONT MASTER CYLINDER 63
REAR MASTER CYLINDER 64
STAND & FOOTREST 66
GUARD 67
GENERATOR 69
STARTING MOTOR 70
METER 71
HEADLIGHT 72
TAILLIGHT 73
ELECTRICAL 1 74
GRAPHICS 77
EMBLEM & LABEL 1 78

INDEX

NUMERICAL INDEX 79

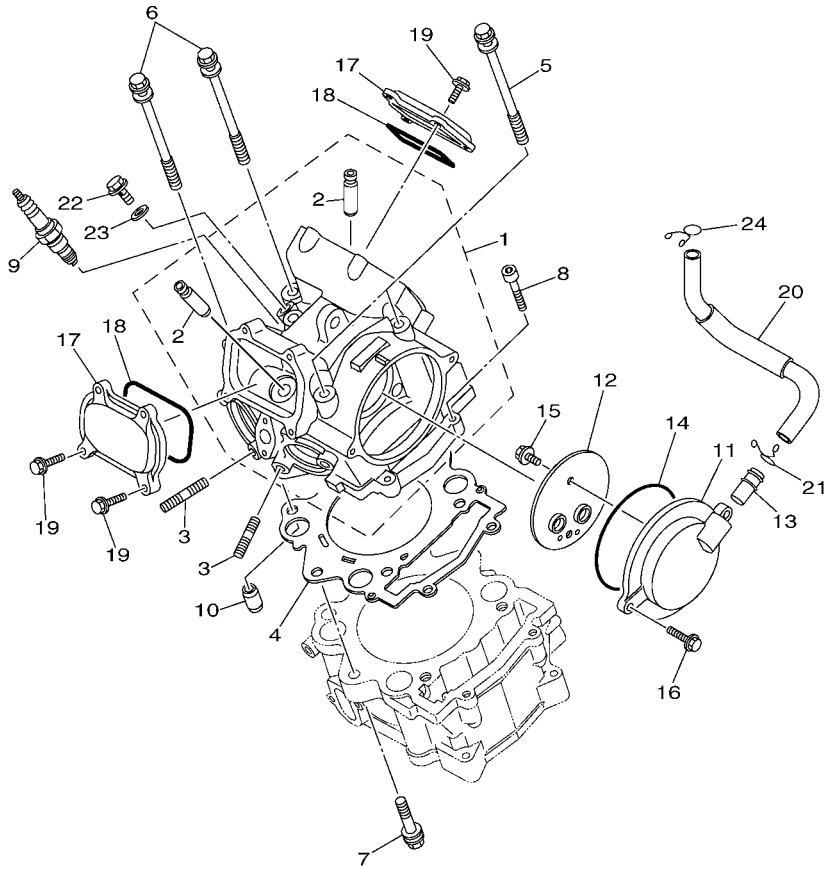

1HP1110-L010

FIG. 1 CYLINDER HEAD

REF. NO.	PART NO.	DESCRIPTION	USA					REMARKS
1	16B–11102–00	CYLINDER HEAD ASSY	1					
2	4G0–11133–11	.GUIDE, VALVE 1	4					
3	95612–08625	BOLT, STUD	4					
4	3B4–11181–00	GASKET, CYLINDER HEAD 1	1					
5	90109–09003	BOLT	2					
6	90109–09002	BOLT	2					
7	90109–09005	BOLT	2					
8	91312–06030	BOLT	2					
9	94701–00423	PLUG, SPARK (NGK LMAR6A-9)	1					
10	93612–16254	PIN, DOWEL	2					
11	3B4–11185–00	COVER, CYLINDER HEAD SIDE 3	1					
12	3B4–11165–10	PLATE, BREATHER	1					
13	371–11167–01	PIPE, BREATHER 2	1					
14	93210–96601	O-RING	1					
15	95022–06012	BOLT, FLANGE	2					
16	95022–06020	BOLT, FLANGE	2					
17	1S3–11186–00	COVER, CYLINDER HEAD SIDE 2	2					
18	93210–78544	O-RING	2					
19	95022–06020	BOLT, FLANGE	8					
20	3B4–11166–01	PIPE, BREATHER 1	1					
21	90467–140A4	CLIP	1					
22	90401–08004	BOLT, UNION	1					
23	90430–08119	GASKET	1					
24	90467–150A2	CLIP	1					

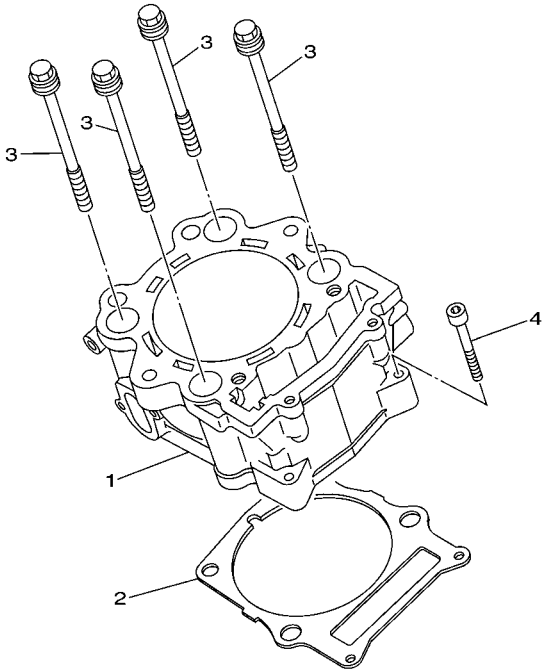

3B41100-F020

FIG. 2 CYLINDER

REF. NO.	PART NO.	DESCRIPTION	USA					REMARKS
1	3B4–11311–10	CYLINDER 1	1					
2	1S3–11351–00	GASKET, CYLINDER	1					
3	90119–10023	BOLT, WITH WASHER	4					
4	91312–06040	BOLT	2					

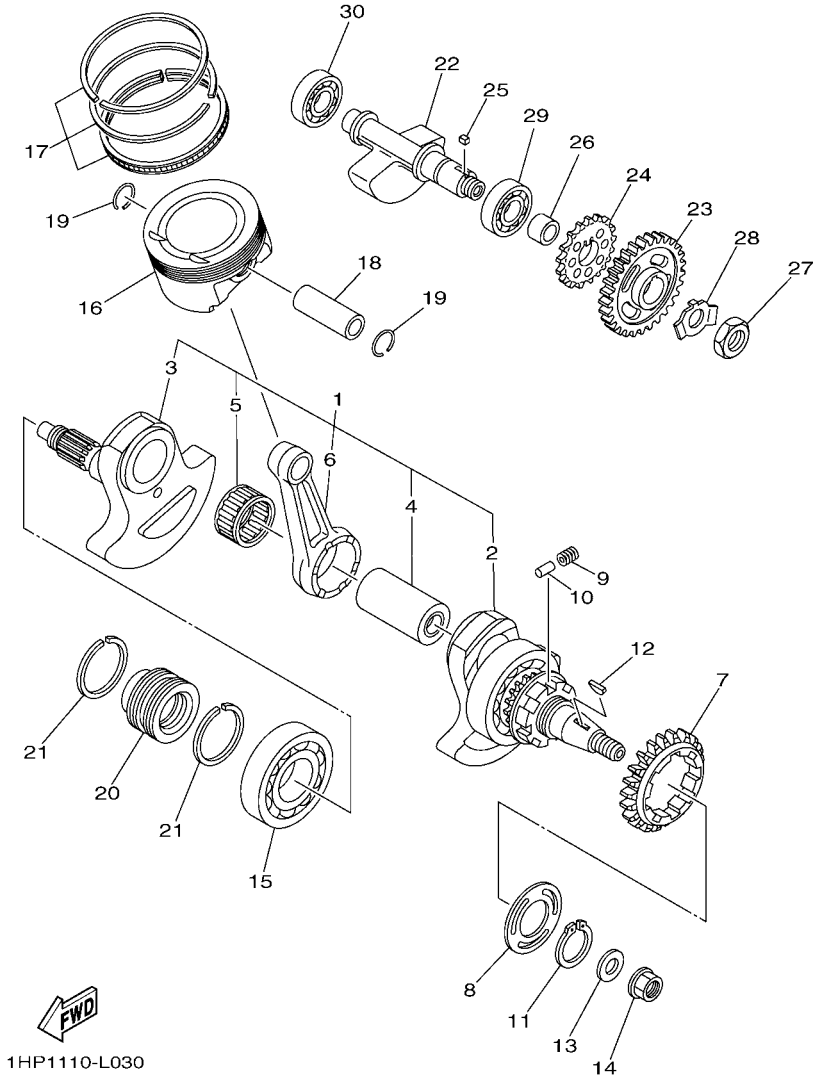

FIG. 3 CRANKSHAFT & PISTON

REF. NO.	PART NO.	DESCRIPTION	USA					REMARKS
1	3B4–11400–00	CRANKSHAFT ASSY	1					
2	3B4–11401–09	.CRANK SUB ASSY 1	1					
3	3B4–11402–09	.CRANK SUB ASSY 2	1					
4	1S3–11681–00	.PIN, CRANK 1	1					
5	93310–84017	.BEARING	1					
6	1S3–11651–00	.ROD, CONNECTING	1					
7	5KM–11536–10	GEAR, DRIVE (46T)	1					
8	5KM–11565–00	WASHER, BEARING COVER	1					
9	90501–220A1	SPRING, COMPRESSION	8					
10	93606–09002	PIN, DOWEL	4					
11	99009–35400	CIRCLIP	1					
12	90280–05001	KEY, WOODRUFF	1					
13	90201–16013	WASHER, PLATE	1					
14	90179–16004	NUT	1					
15	93306–30810	BEARING	1					
16	1S3–11631–10	PISTON (STD)	1					
17	1S3–11603–10	PISTON RING SET (STD)	1					
18	5VK–11633–00	PIN, PISTON	1					
19	93450–24154	CIRCLIP	2					
20	3B4–16181–00	SPACER 1	1					
21	3B4–11447–00	SEAL, CRANK	2					
22	3B4–11454–00	WEIGHT 1	1					
23	1HP–11531–00	GEAR, BALANCE WEIGHT	1					
24	1HP–13354–00	SPROCKET, DRIVE	1					
25	90282–05013	KEY, STRAIGHT	1					
26	90387–24001	COLLAR	1					
27	90170–18003	NUT	1					

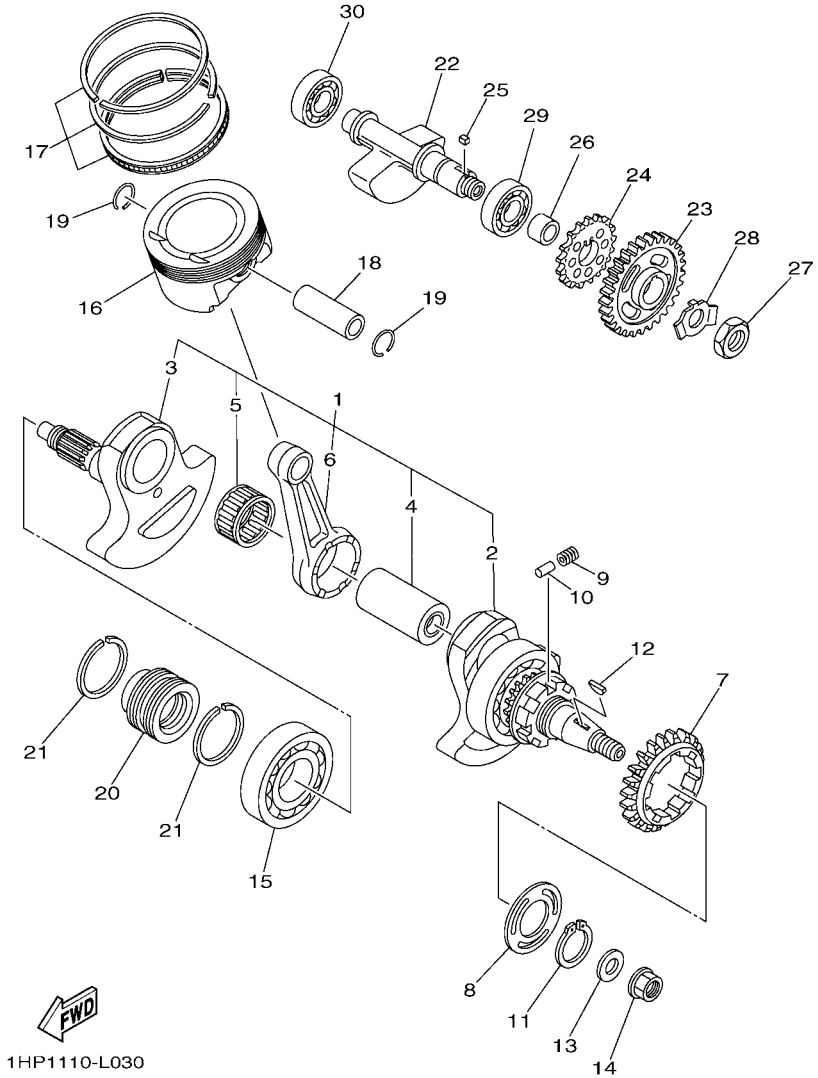

FIG. 3 CRANKSHAFT & PISTON

REF. NO.	PART NO.	DESCRIPTION	USA					REMARKS
28	90215–18001	WASHER, LOCK	1					
29	93306–30534	BEARING	1					
30	93306–30438	BEARING	1					

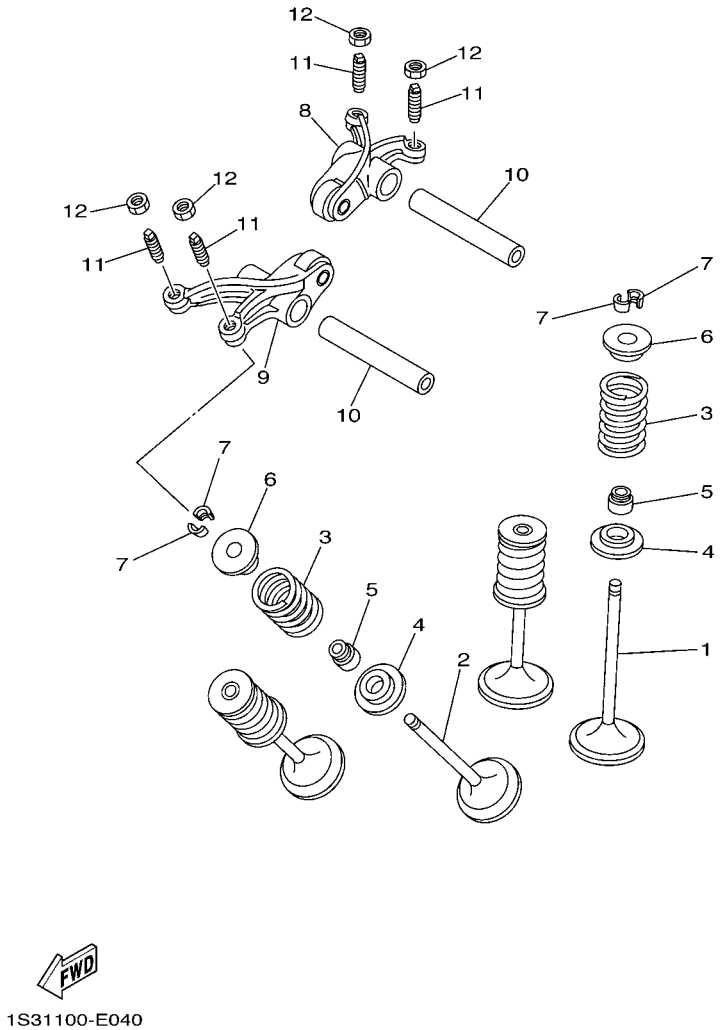

FIG. 4 VALVE

REF. NO.	PART NO.	DESCRIPTION	USA					REMARKS
1	5VK–12111–00	VALVE, INTAKE	2					
2	5VK–12121–00	VALVE, EXHAUST	2					
3	5VK–12113–00	SPRING, VALVE INNER	4					
4	3YF–12116–00	SEAT, VALVE SPRING	4					
5	5H0–12119–00	SEAL, VALVE STEM	4					
6	3YF–12117–01	RETAINER, VALVE SPRING	4					
7	4G0–12118–00	COTTER, VALVE	8					
8	5VK–12151–00	ARM, VALVE ROCKER	1					
9	5VK–12161–00	ARM, VALVE ROCKER 2	1					
10	5VK–12146–00	SHAFT, ROCKER	2					
11	5XT–12159–00	SCREW, VALVE ADJUSTING	4					
12	90170–06128	NUT	4					

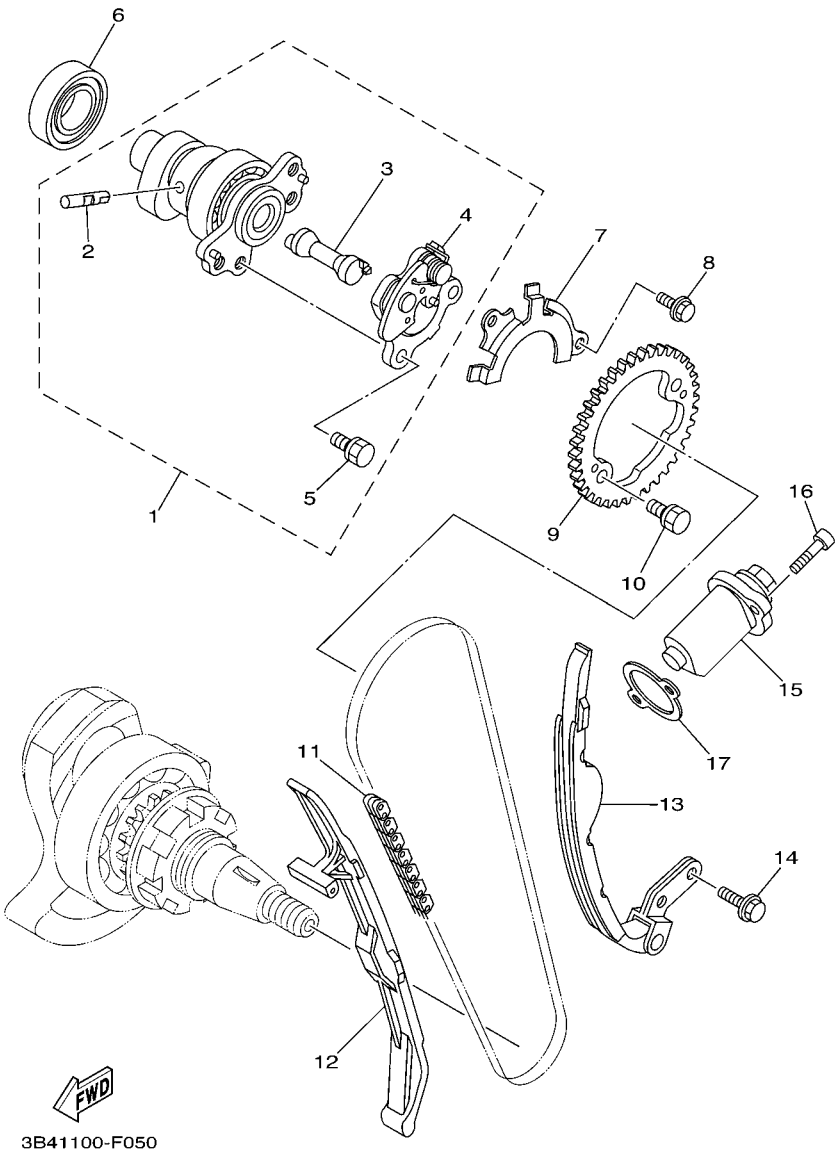

FIG. 5 CAMSHAFT & CHAIN

REF. NO.	PART NO.	DESCRIPTION	USA					REMARKS
1	3B4–12170–01	CAMSHAFT ASSY 1	1					
2	5VK–12284–00	.PIN, DECOMPRESSION LEVER	1					
3	1S3–12290–00	.LEVER, DECOMPRESSION SPRING	1					
4	1S3–12280–01	.DECOMPRESSION ASSY	1					
5	90105–07006	.BOLT, FLANGE	2					
6	93306–07209	BEARING	1					
7	5VK–1111F–00	PLATE	1					
8	90105–06078	BOLT, FLANGE	2					
9	1S3–12176–00	SPROCKET, CAM CHAIN	1					
10	90105–07006	BOLT, FLANGE	2					
11	94591–57126	CHAIN (98XRH2010-126M)	1					
12	3B4–12231–01	GUIDE, STOPPER 1	1					
13	3B4–12241–00	GUIDE, STOPPER 2	1					
14	90105–06082	BOLT, FLANGE	2					
15	3TB–12210–00	TENSIONER ASSY, CAM CHAIN	1					
16	91312–06025	BOLT	2					
17	4DW–12213–00	GASKET, TENSIONER CASE	1					

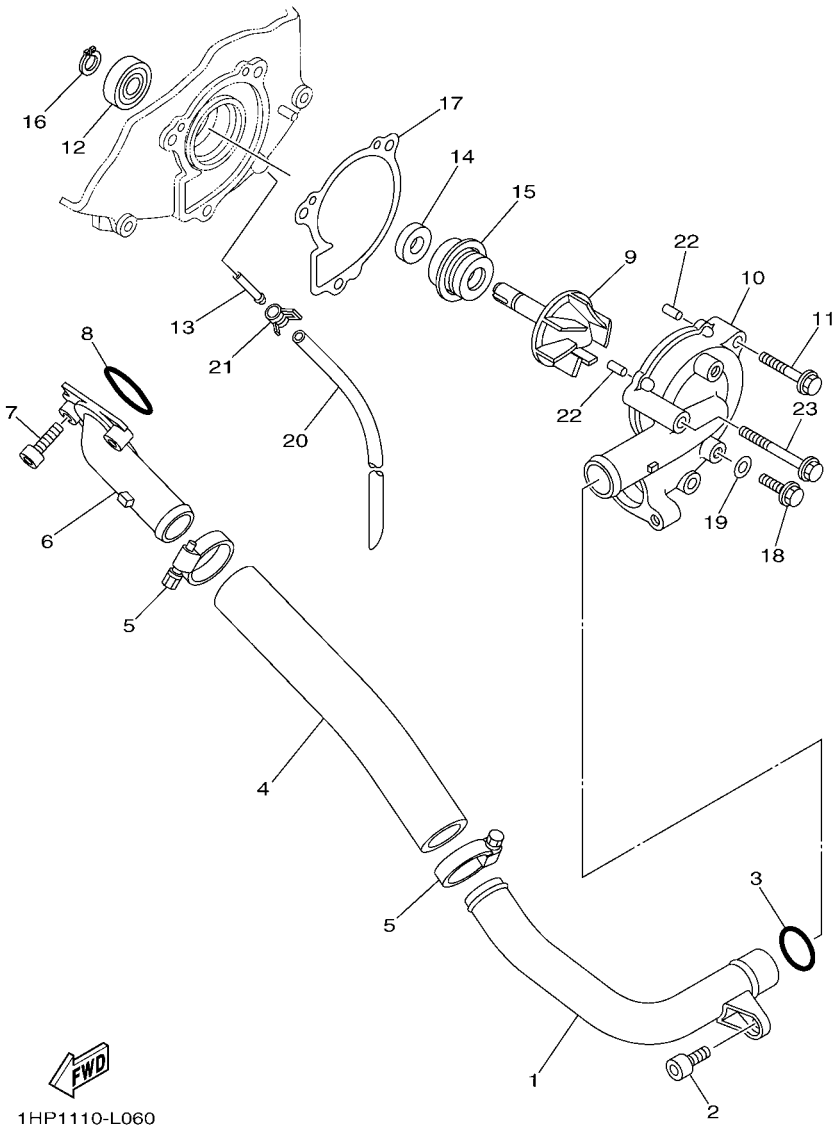

FIG. 6 WATER PUMP

REF. NO.	PART NO.	DESCRIPTION	USA					REMARKS
1	3B4–12481–00	PIPE 1	1					
2	91312–06012	BOLT	1					
3	93210–21190	O-RING	1					
4	3B4–12577–01	HOSE 2	1					
5	90450–32015	HOSE CLAMP ASSY	2					
6	5KM–12469–00	JOINT 1	1					
7	91312–06020	BOLT	2					
8	93210–33786	O-RING	1					
9	3B4–12450–00	IMPELLER SHAFT ASSY	1					
10	3B4–12422–00	COVER, HOUSING	1					
11	95022–06030	BOLT, FLANGE	1					
12	93306–00006	BEARING	1					
13	5D3–1243K–00	PIPE, DRAIN	1					
14	93101–10090	OIL SEAL	1					
15	11H–12438–10	SEAL, MECHANICAL	1					
16	99009–10400	CIRCLIP	1					
17	3B4–12428–00	GASKET, HOUSING COVER 2	1					
18	95022–06010	BOLT, FLANGE	2					
19	90430–06014	GASKET	2					
20	90445–07340	HOSE (L310)	1					
21	90467–07093	CLIP	1					
22	93604–10011	PIN, DOWEL	2					
23	95022–06050	BOLT, FLANGE	1					

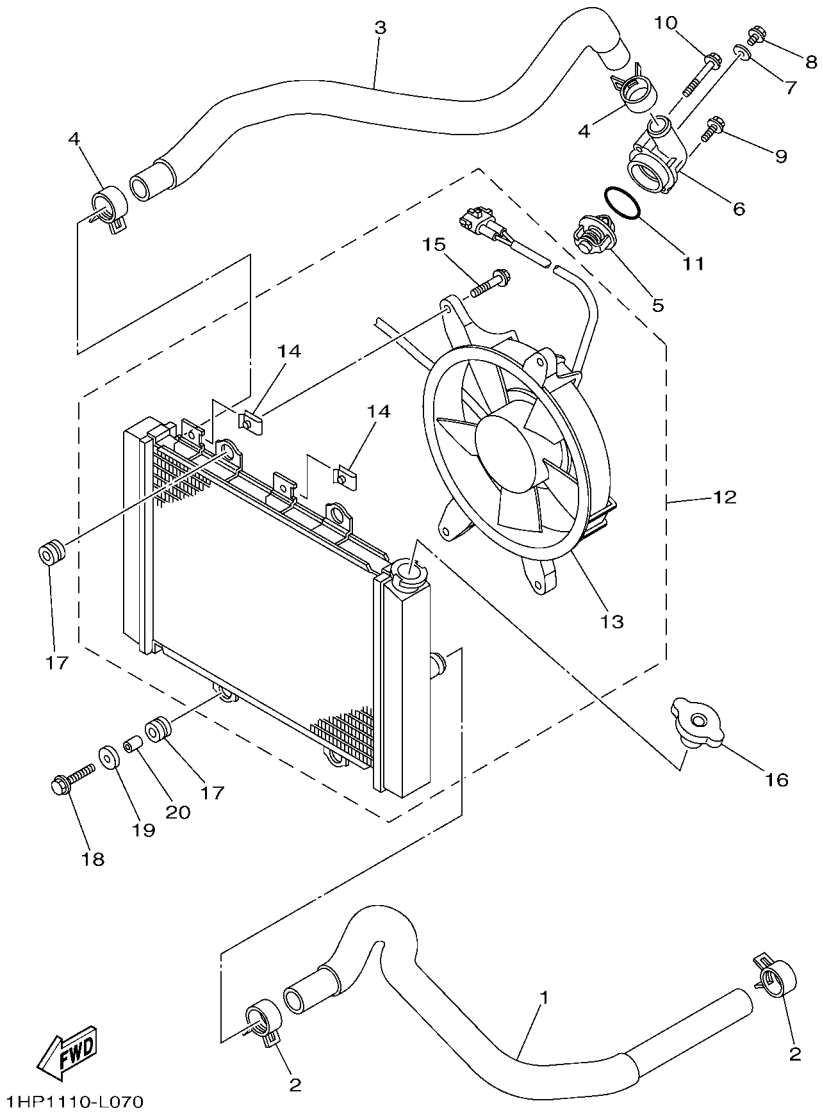

FIG. 7 RADIATOR & HOSE

REF. NO.	PART NO.	DESCRIPTION	USA					REMARKS
1	1HP–E2576–00	HOSE 1	1					
2	90467–26189	CLIP	2					
3	1HP–E2578–00	HOSE 3	1					
4	90467–26189	CLIP	2					
5	3B4–12411–00	THERMOSTAT	1					
6	1S3–12413–00	COVER, THERMOSTAT	1					
7	90430–06014	GASKET	1					
8	95022–06010	BOLT, FLANGE	1					
9	95022–06020	BOLT, FLANGE	1					
10	95022–06045	BOLT, FLANGE	1					
11	93210–41042	O-RING	1					
12	1HP–E240A–00	RADIATOR ASSY	1					
13	1HP–E2405–00	.BLOWER ASSY	1					
14	1HP–E2535–00	.NUT SPRING	4					
15	1HP–E2675–00	.BOLT, BLOWER HOLDING	4					
16	1HP–E2462–00	CAP, RADIATOR	1					
17	90480–15235	GROMMET	4					
18	95812–06020	BOLT, FLANGE	2					
19	90209–06012	WASHER	2					
20	90387–06113	COLLAR	2					

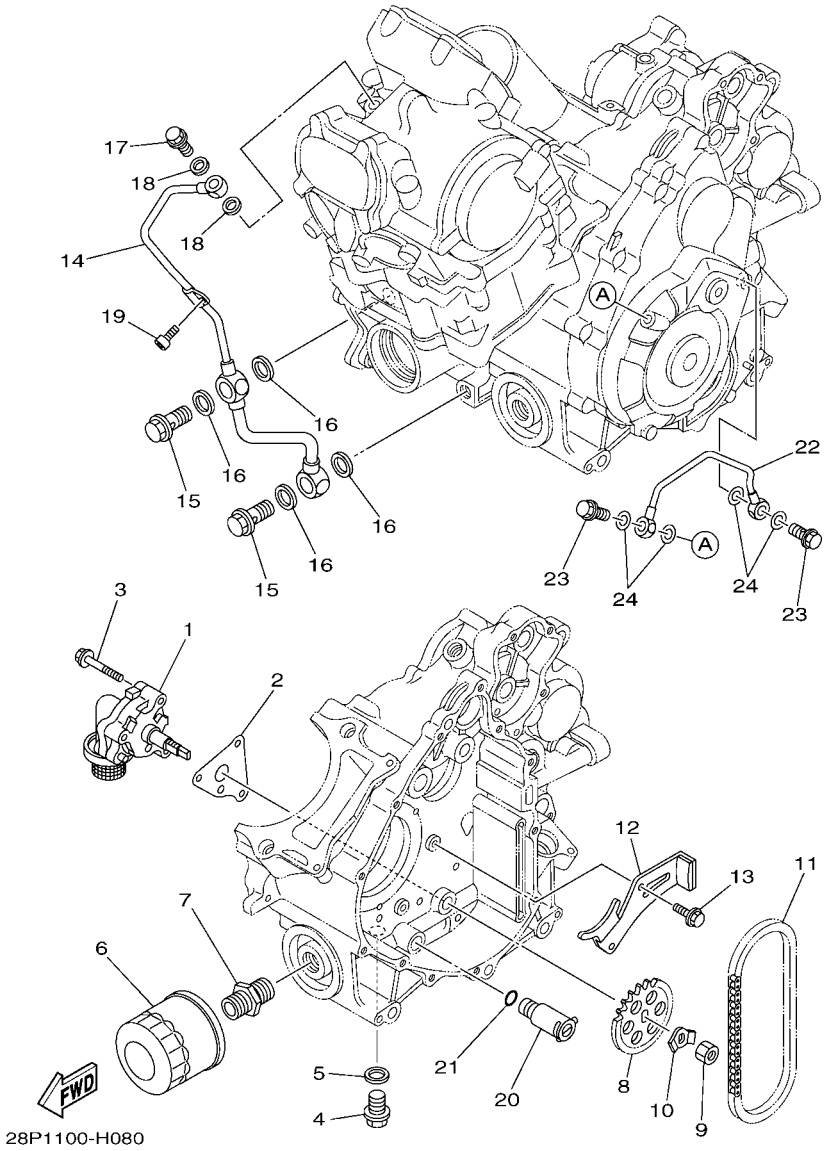

FIG. 8 OIL PUMP

REF. NO.	PART NO.	DESCRIPTION	USA					REMARKS
1	3B4–13300–00	OIL PUMP ASSY	1					
2	3B4–13329–00	GASKET, PUMP COVER	1					
3	95022–06040	BOLT, FLANGE	3					
4	90340–14132	PLUG, STRAIGHT SCREW	1					
5	214–11198–01	GASKET	1					
6	5GH–13440–20	ELEMENT ASSY, OIL CLEANER	1					
7	90401–20008	BOLT, UNION	1					
8	3B4–13355–00	SPROCKET, DRIVEN	1					
9	95312–10600	NUT	1					
10	90215–10008	WASHER, LOCK	1					
11	94580–31074	CHAIN (DID 25HT)	1					
12	3B4–12221–00	GUIDE, STOPPER 3	1					
13	90105–06082	BOLT, FLANGE	2					
14	3B4–13171–00	PIPE, DELIVERY 2	1					
15	90401–14118	BOLT, UNION	2					
16	90430–14043	GASKET	4					
17	90401–10024	BOLT, UNION	1					
18	90430–10188	GASKET	2					
19	91312–06012	BOLT	1					
20	25G–13490–00	RELIEF VALVE ASSY	1					
21	93210–10096	O-RING	1					
22	28P–13161–00	PIPE, DELIVERY 1	1					
23	90401–08006	BOLT, UNION	2					
24	90430–08119	GASKET	4					

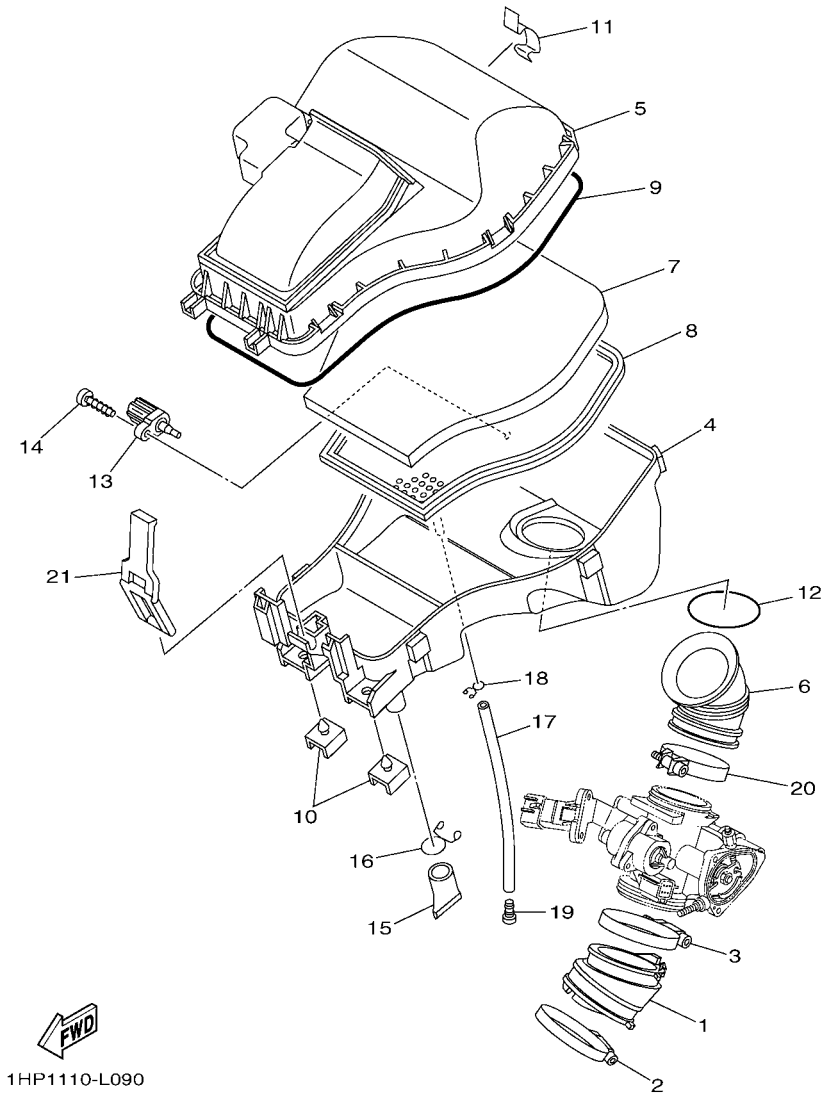

FIG. 9 INTAKE

REF. NO.	PART NO.	DESCRIPTION	USA					REMARKS
1	3B4–13586–00	JOINT, CARBURETOR 1	1					
2	90450–72004	HOSE CLAMP ASSY	1					
3	90450–72004	HOSE CLAMP ASSY	1					
4	3B4–14411–21	CASE, AIR CLEANER 1	1					
5	3B4–14402–03	CAP ASSY, AIR CLEANER	1					
6	3B4–14453–00	JOINT, AIR CLEANER 1	1					
7	1HP–E4451–00	ELEMENT, AIR CLEANER	1					
8	1HP–E4472–00	PLATE, ELEMENT	1					
9	3B4–14457–00	SEAL	1					
10	3B4–14409–00	DAMPER	2					
11	3B4–14424–00	CLIP, CAP FITTING	6					
12	1HP–E4462–00	SEAL	1					
13	8FP–85886–00	SENSOR, AIR TEMPERATURE	1					
14	97702–50520	SCREW, TAPPING	1					
15	59V–14457–00	SEAL	1					
16	90467–220A1	CLIP	1					
17	91A20–07020	TUBE, FLEXIBLE VINYL (L200)	1					
18	90467–100A1	CLIP	1					
19	90338–08174	PLUG	1					
20	90450–59006	HOSE CLAMP ASSY	1					
21	3B4–14455–00	BAND	1					

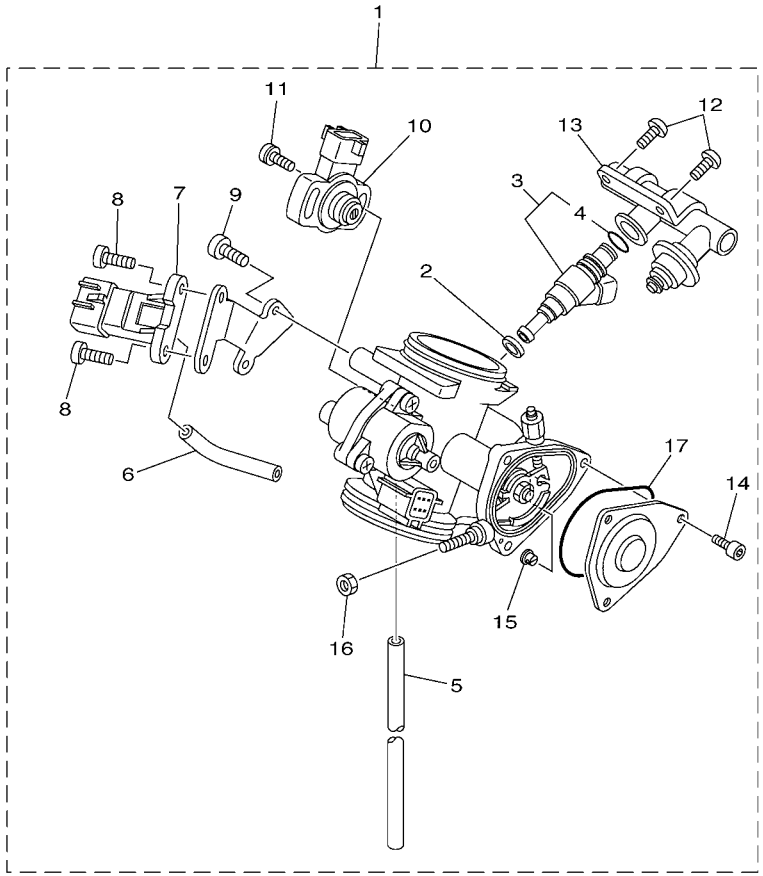

43PG100-J100

FIG. 10 THROTTLE BODY ASSY 1

REF. NO.	PART NO.	DESCRIPTION	USA					REMARKS
1	43P–13750–10	THROTTLE BODY ASSY	1					
2	8FP–13556–00	.RUBBER, INJECTOR	1					
3	3B4–13761–00	.INJECTOR	1					
4	5PS–14147–00	..O-RING	1					
5	28P–13543–00	.HOSE, AIR	1					
6	5JW–14348–00	.PIPE 1	1					
7	1C7–82380–00	.SENSOR, PRESSURE	1					
8	92502–06010	.SCREW, PAN HEAD	2					
9	98507–05010	.SCREW, PAN HEAD	2					
10	3B4–85885–00	.THROTTLE SENSOR ASSY	1					
11	8CC–14216–10	.SCREW	2					
12	98502–06012	.SCREW, PAN HEAD	2					
13	3B4–13160–00	.DELIVERY PIPE ASSY 1	1					
14	91312–04006	.BOLT	3					
15	1UY–14155–00	.GUIDE, CABLE	1					
16	1S3–14161–00	.NUT, CABLE ADJUSTING	1					
17	5LP–14147–00	.O-RING	1					

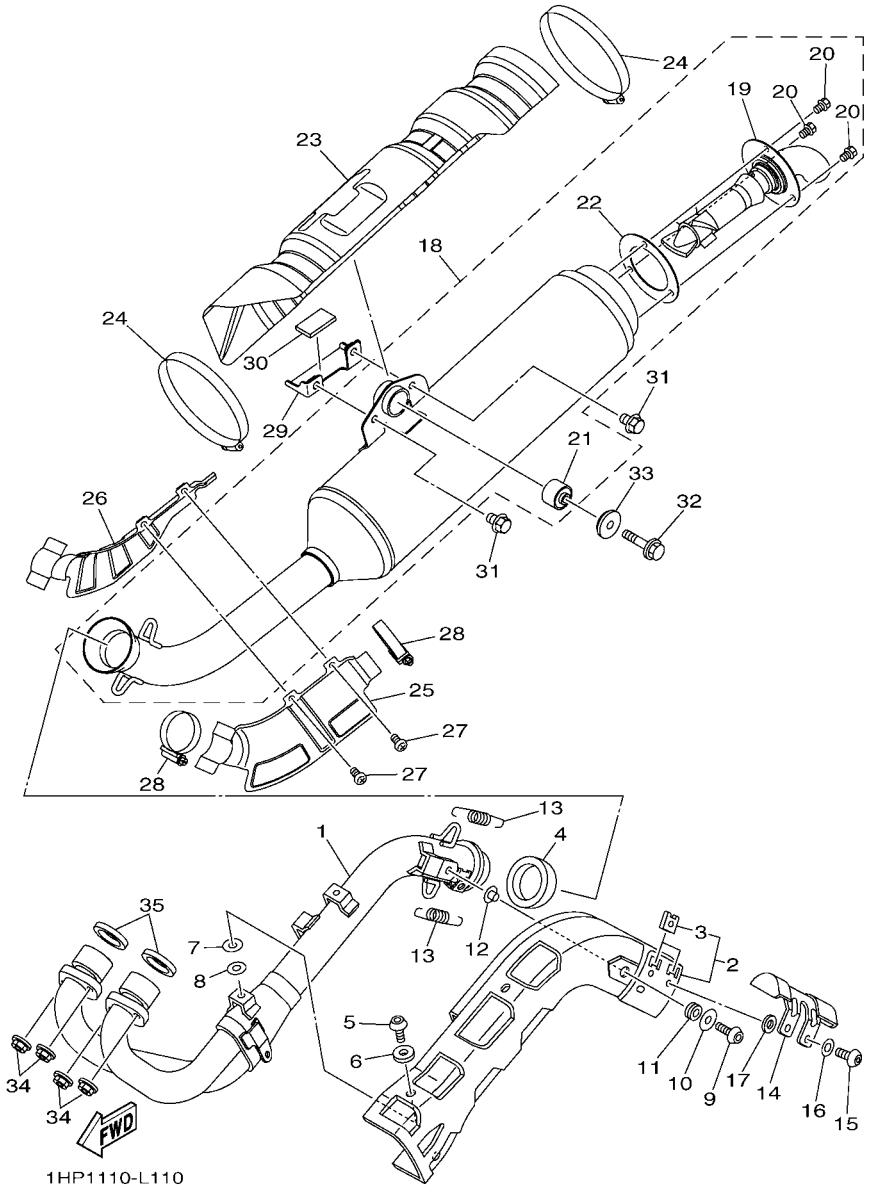

FIG. 11 EXHAUST

REF. NO.	PART NO.	DESCRIPTION	USA					REMARKS
1	1HP–E4611–00	PIPE, EXHAUST 1	1					
2	1HP–E4627–00	COVER, EXHAUST	1					
3	90183–06819	.NUT, SPRING	2					
4	1HP–E4714–00	GASKET, MUFFLER	1					
5	92012–06014	BOLT, BUTTON HEAD	5					
6	90201–06076	WASHER, PLATE	5					
7	90201–06019	WASHER, PLATE	5					
8	90201–05825	WASHER, PLATE	5					
9	92012–06016	BOLT, BUTTON HEAD	1					
10	90201–06081	WASHER, PLATE	1					
11	90480–17001	GROMMET	1					
12	90387–08083	COLLAR	1					
13	90506–30006	SPRING, TENSION	2					
14	1HP–E4758–00	PROTECTOR, SILENCER	1					
15	92012–06012	BOLT, BUTTON HEAD	2					
16	92902–06200	WASHER	2					
17	90201–05015	WASHER, PLATE	2					
18	1HP–E4703–00	MUFFLER COMP. 1	1					
19	1HP–E4752–00	.PIPE, OUTLET	1					
20	95022–06008	.BOLT, FLANGE	3					
21	1HP–F7414–00	.DAMPER, FOOTREST	1					
22	1HP–E4755–00	.GASKET, SILENCER	1					
23	1HP–E4718–00	PROTECTOR, MUFFLER 1	1					
24	90450–99805	HOSE CLAMP ASSY	2					
25	1HP–E471C–00	PROTECTOR ASSY 1	1					
26	1HP–E472C–00	PROTECTOR ASSY., 2	1					
27	98502–06012	SCREW, PAN HEAD	2					

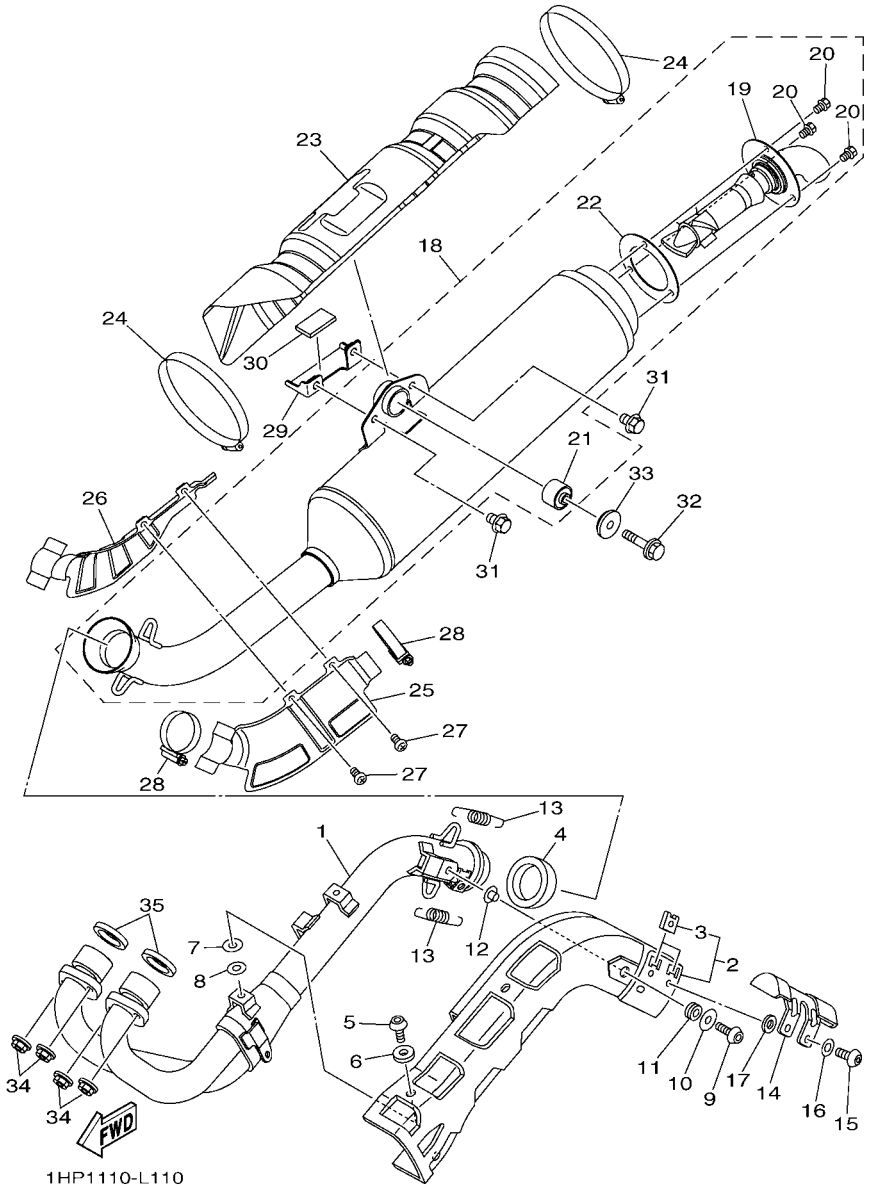

FIG. 11 EXHAUST

REF. NO.	PART NO.	DESCRIPTION	USA					REMARKS
28	90450–45806	HOSE CLAMP ASSY	2					
29	1HP–E477U–00	STOPPER 1	1					
30	1HP–E4733–00	MAT 1	1					
31	95822–08012	BOLT, FLANGE	2					
32	95812–08040	BOLT, FLANGE	1					
33	3B4–14759–01	WASHER	1					
34	95702–08500	NUT, FLANGE	4					
35	3YF–14613–01	GASKET, EXHAUST PIPE	2					

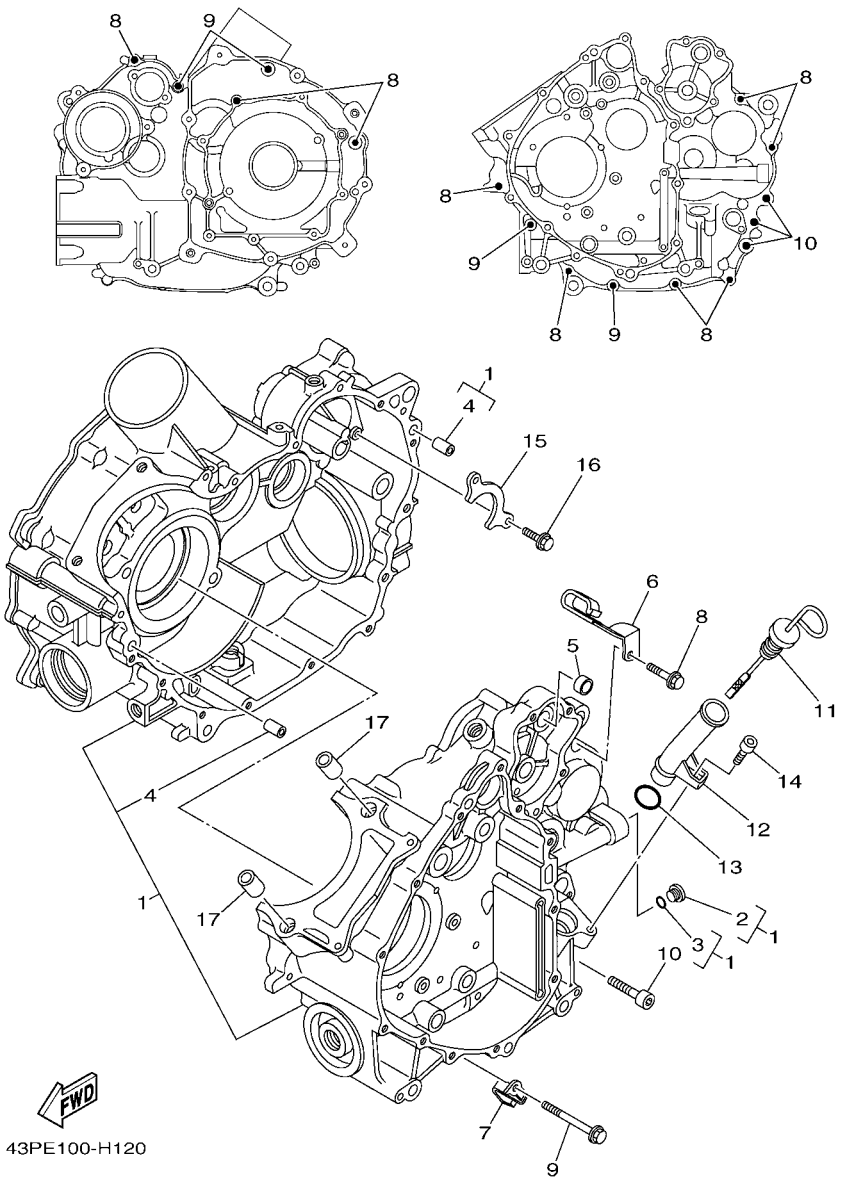

FIG. 12 CRANKCASE

REF. NO.	PART NO.	DESCRIPTION	USA					REMARKS
1	3B4–15100–25	CRANKCASE ASSY	1					
2	36Y–15189–00	.PLUG	1					
3	93210–16325	.O-RING	1					
4	99530–10116	.PIN, DOWEL	2					
5	3B4–18581–00	SPACER, CAM SHAFT	1					
6	90462–16003	CLAMP	1					
7	90462–08049	CLAMP	1					
8	95022–06030	BOLT, FLANGE	9					
9	95022–06060	BOLT, FLANGE	4					
10	91312–08040	BOLT	3					
11	3B4–15362–01	PLUG, OIL LEVEL	1					
12	3B4–15112–02	PIPE, OIL	1					
13	93210–21631	O-RING	1					
14	91312–06012	BOLT	1					
15	3B4–15388–00	PLATE, BEARING COVER	1					
16	90105–06082	BOLT, FLANGE	2					
17	99530–14016	PIN, DOWEL	2					

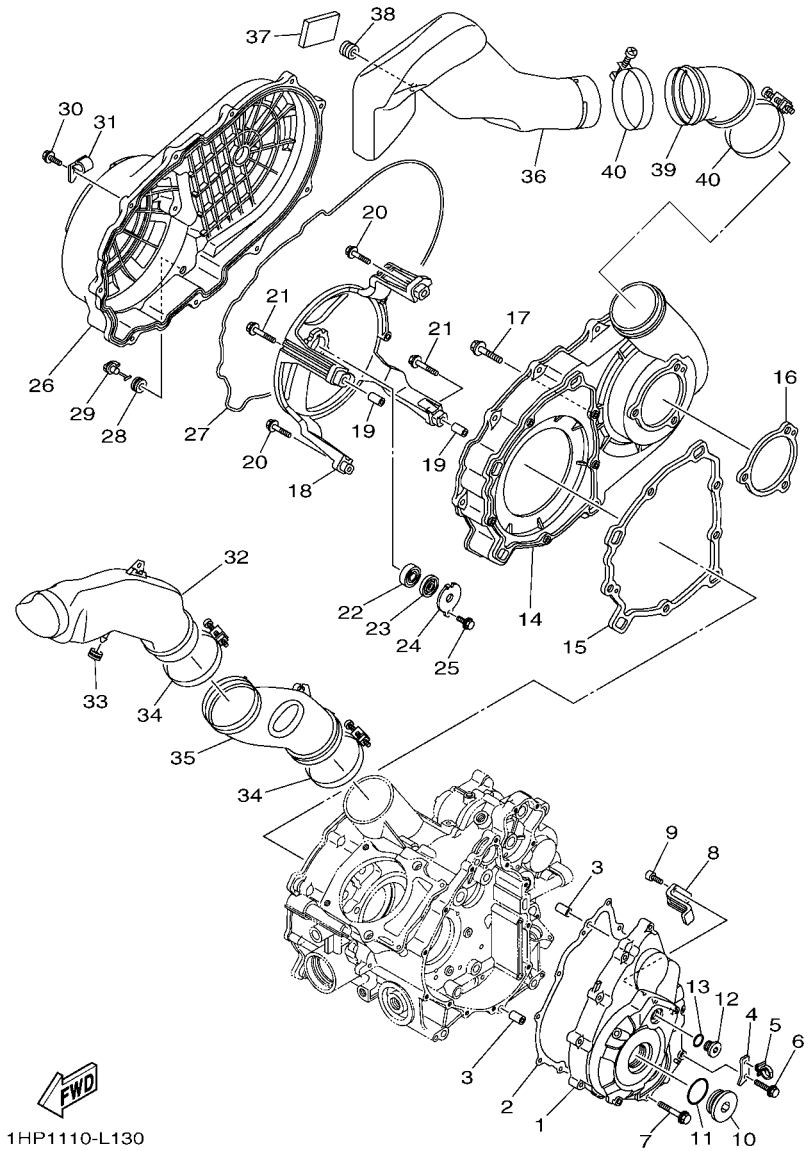

FIG. 13 CRANKCASE COVER 1

REF. NO.	PART NO.	DESCRIPTION	USA					REMARKS
1	3B4–15411–10	COVER, CRANKCASE 1	1					
2	3B4–15451–00	GASKET, CRANKCASE COVER 1	1					
3	99530–10116	PIN, DOWEL	2					
4	1HP–15191–00	PLATE	1					
5	90464–12001	CLAMP	1					
6	95022–06030	BOLT, FLANGE	11					
7	95022–06050	BOLT, FLANGE	1					
8	3B4–15113–00	PLATE	1					
9	91312–05014	BOLT	2					
10	90340–36004	PLUG, STRAIGHT SCREW	1					
11	93210–357A3	O-RING	1					
12	90340–14016	PLUG, STRAIGHT SCREW	1					
13	93210–14369	O-RING	1					
14	3B4–15421–00	COVER, CRANKCASE 2	1					
15	3B4–15453–00	GASKET	1					
16	3B4–15315–00	SEAL, CRANKCASE	1					
17	95822–06030	BOLT, FLANGE	8					
18	3B4–15442–00	HOUSING, BEARING	1					
19	99530–10116	PIN, DOWEL	2					
20	95822–06030	BOLT, FLANGE	2					
21	95822–06040	BOLT, FLANGE	2					
22	93306–20103	BEARING	1					
23	93101–12168	OIL SEAL	1					
24	4WV–15381–00	PLATE, BEARING COVER	1					
25	95022–06016	BOLT, FLANGE	1					
26	3B4–15431–00	COVER, CRANKCASE 3	1					
27	3B4–15379–00	SEAL, CRANKCASE	1					

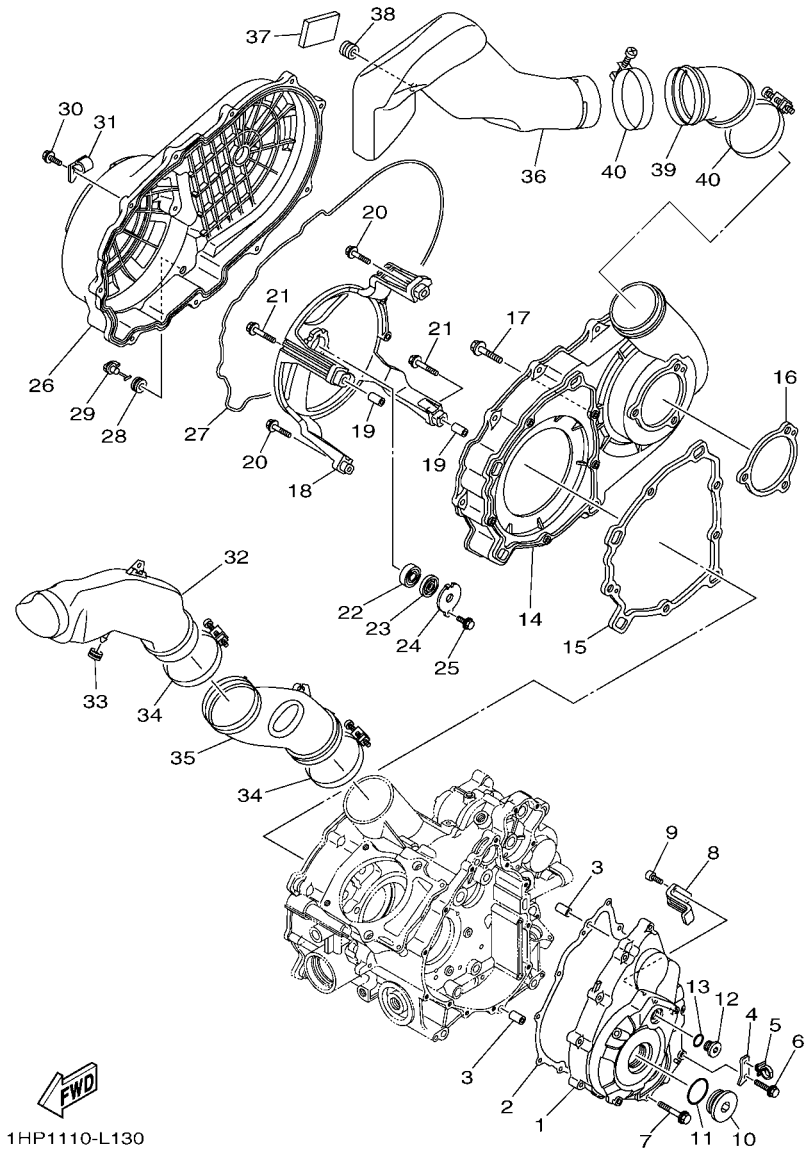

FIG. 13 CRANKCASE COVER 1

REF. NO.	PART NO.	DESCRIPTION	USA					REMARKS
28	90480–13018	GROMMET	1					
29	5KM–15351–00	PLUG, DRAIN	1					
30	95822–06020	BOLT, FLANGE	12					
31	90462–08055	CLAMP	1					
32	1HP–E5471–00	DUCT, AIR	1					
33	90480–13567	GROMMET	1					
34	90460–85135	CLAMP, HOSE	2					
35	1HP–E5472–00	SEAL, AIR DUCT	1					
36	1HP–E5473–00	DUCT, AIR	1					
37	1S3–82123–00	SEAT, BATTERY	2					
38	90480–13398	GROMMET	1					
39	1HP–E5474–00	SEAL, AIR DUCT	1					
40	90460–85135	CLAMP, HOSE	2					

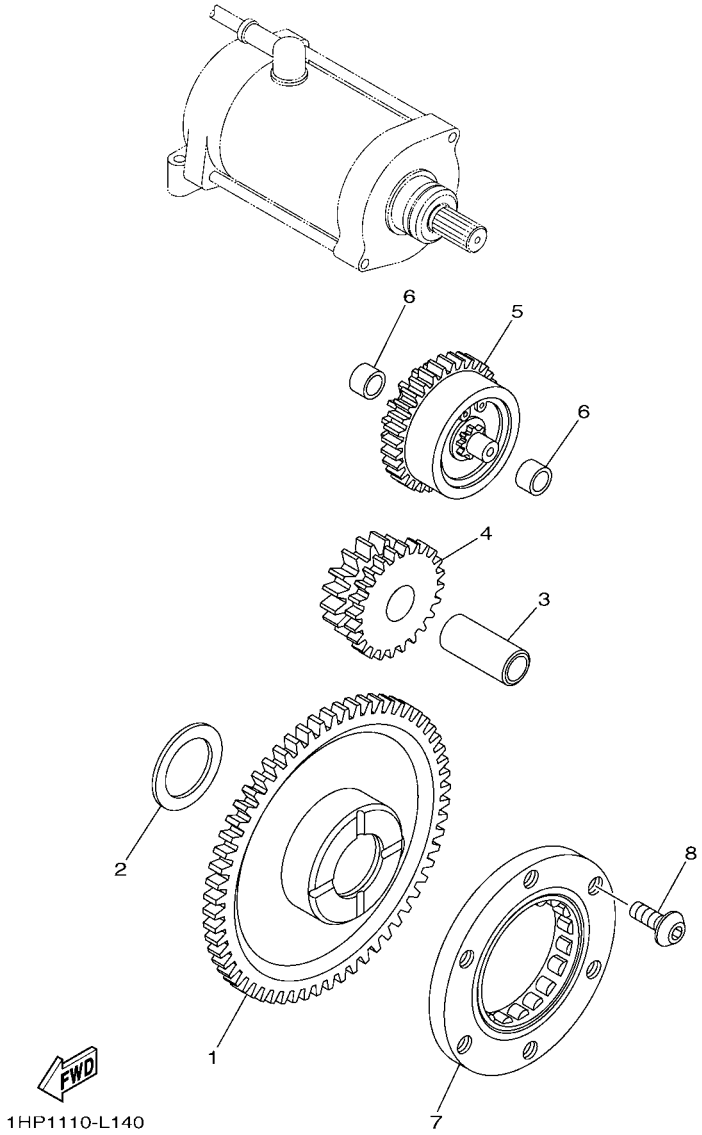

FIG. 14 STARTER CLUTCH

REF. NO.	PART NO.	DESCRIPTION	USA					REMARKS
1	1HP–15515–00	GEAR 3 (49T)	1					
2	90201–286K9	WASHER, PLATE (T1.0)	1					
3	3B4–15522–00	SHAFT 2	1					
4	3B4–15517–01	GEAR, IDLER 2 (25T/15T)	1					
5	1S3–15560–01	DAMPER ASSY	1					
6	90380–10002	BUSH, SOLID	2					
7	5KM–15590–00	STARTER ONE-WAY ASSY	1					
8	90149–08049	SCREW	3					

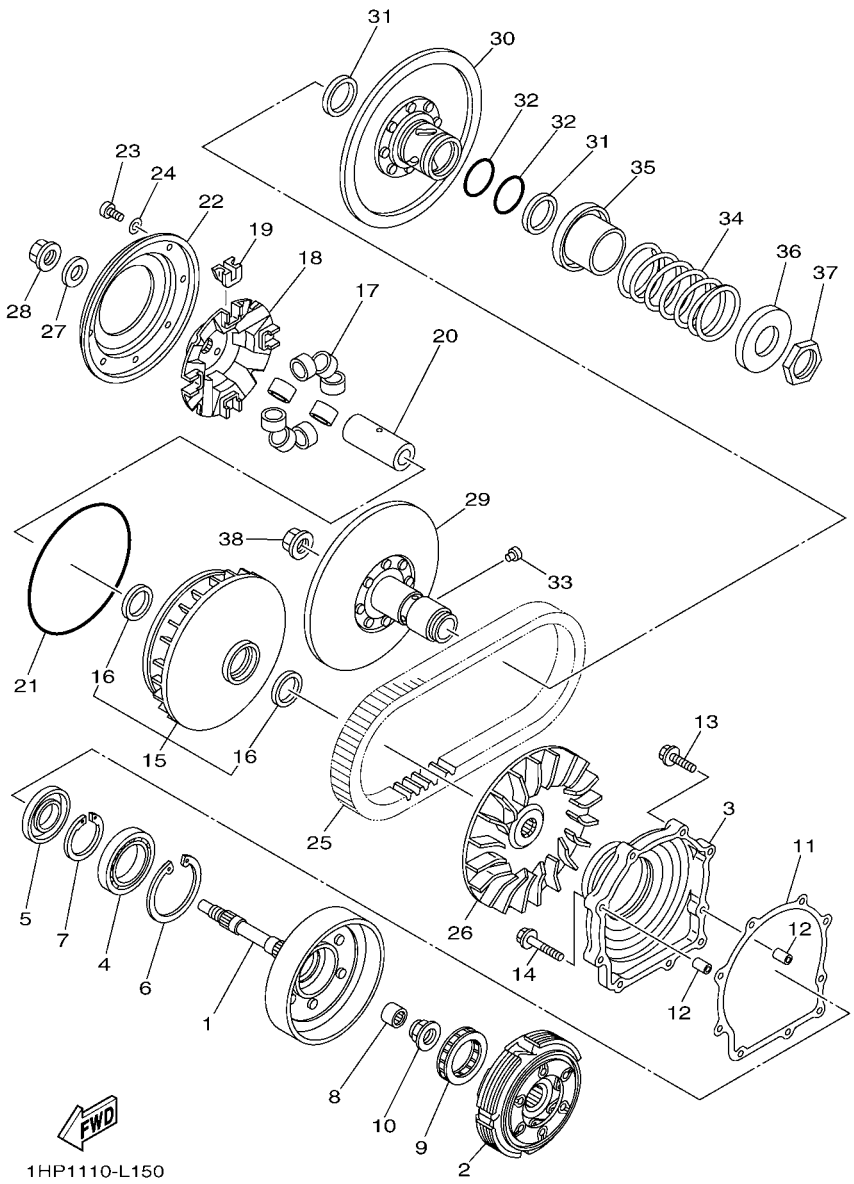

FIG. 15 CLUTCH

REF. NO.	PART NO.	DESCRIPTION	USA					REMARKS
1	16B–16611–01	CLUTCH HOUSING COMP.	1					
2	3B4–16620–00	CLUTCH CARRIER ASSY	1					
3	3B4–15163–00	HOUSING, BEARING 1	1					
4	93316–01003	BEARING	1					
5	93102–35004	OIL SEAL	1					
6	99009–80500	CIRCLIP	1					
7	93410–46079	CIRCLIP	1					
8	93315–21813	BEARING	1					
9	4SH–16664–00	BEARING, ONE WAY	1					
10	90179–22021	NUT	1					
11	3B4–15463–00	GASKET, COVER PINION 2	1					
12	99530–10116	PIN, DOWEL	2					
13	95022–06030	BOLT, FLANGE	7					
14	95022–06040	BOLT, FLANGE	2					
15	3B4–17606–00	PRIMARY SLIDING SHEAVE COMP.	1					
16	93101–35001	.OIL SEAL	2					
17	3B4–17632–01	WEIGHT	8					
18	3B4–17623–01	CAM	1					
19	3B4–17653–00	SLIDER	4					
20	3B4–17645–00	COLLAR	1					
21	93211–594A4	O-RING	1					
22	4WV–17639–10	STOPPER	1					
23	90157–04006	SCREW, PAN HEAD	8					
24	90201–047R9	WASHER, PLATE	8					
25	3B4–17641–00	V-BELT	1					
26	3B4–17611–00	SHEAVE, PRIMARY FIXED	1					
27	90201–190T7	WASHER, PLATE	1					

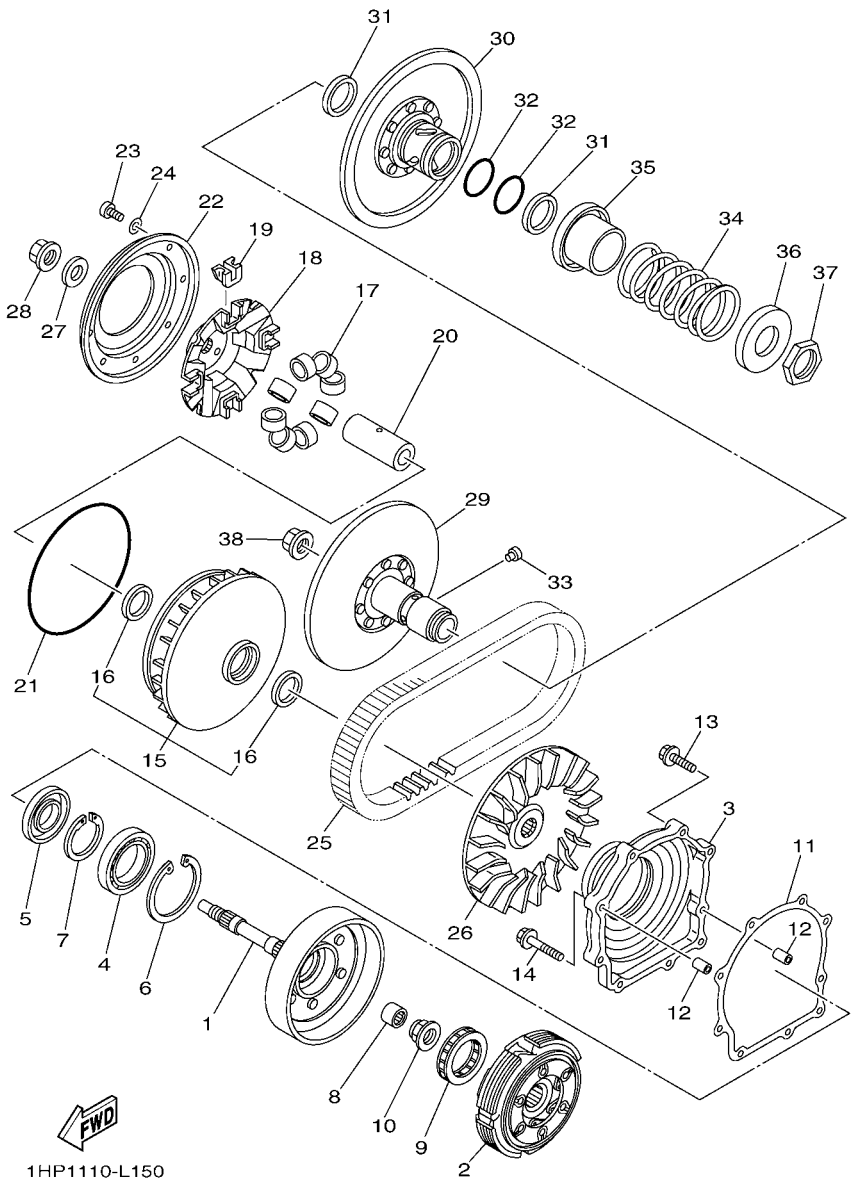

FIG. 15 CLUTCH

REF. NO.	PART NO.	DESCRIPTION	USA					REMARKS
28	90179–16005	NUT	1					
29	3B4–17660–10	SECONDARY FIXED SHEAVE COMP.	1					
30	3B4–17670–10	SECONDARY SLIDING SHEAVE	1					
31	93104–41119	OIL SEAL	2					
32	93210–44545	O-RING	2					
33	4CW–17664–00	PIN, GUIDE	4					
34	90501–650A0	SPRING, COMPRESSION	1					
35	4WV–17684–00	SEAT, SECONDARY SPRING	1					
36	4WV–17644–00	SEAT,SPRING	1					
37	90170–36279	NUT	1					
38	90179–16005	NUT	1					

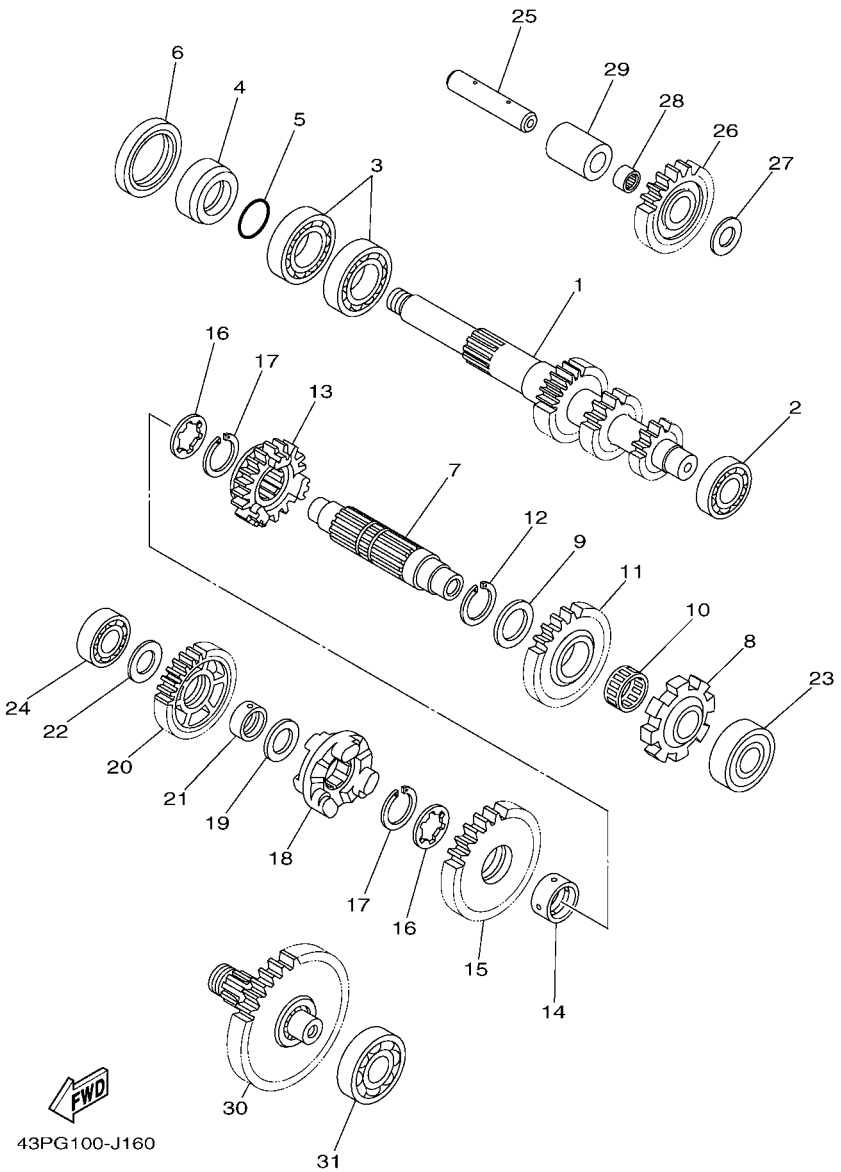

FIG. 16 TRANSMISSION

REF. NO.	PART NO.	DESCRIPTION	USA					REMARKS
1	3B4–17681–10	SHAFT, SECONDARY	1					
2	93306–00401	BEARING	1					
3	93306–07801	BEARING	2					
4	90387–26001	COLLAR	1					
5	93210–26001	O-RING	1					
6	93102–42004	OIL SEAL	1					
7	3B4–17421–00	AXLE, DRIVE	1					
8	3B4–17473–00	STOPPER	1					
9	90201–25290	WASHER, PLATE	1					
10	93310–32590	BEARING	1					
11	3B4–17253–00	GEAR, REVERSE WHEEL 2 (28T)	1					
12	93440–25084	CIRCLIP	1					
13	3B4–17582–00	GEAR, MIDDLE DRIVE (21T)	1					
14	90387–250R3	COLLAR	1					
15	3B4–17233–00	GEAR, LOW WHEEL (31T)	1					
16	90214–22007	WASHER, CLAW	2					
17	93440–25084	CIRCLIP	2					
18	3B4–17285–02	CLUTCH, DOG	1					
19	90201–20028	WASHER, PLATE	1					
20	3B4–17223–10	GEAR, HIGH WHEEL (31T)	1					
21	90387–20021	COLLAR	1					
22	90201–170U8	WASHER, PLATE	1					
23	93306–20483	BEARING	1					
24	93306–20309	BEARING	1					
25	3B4–17432–01	AXLE, IDLE	1					
26	16B–17243–00	GEAR, REVERSE WHEEL 1(23T)	1					
27	90201–15029	WASHER, PLATE	1					

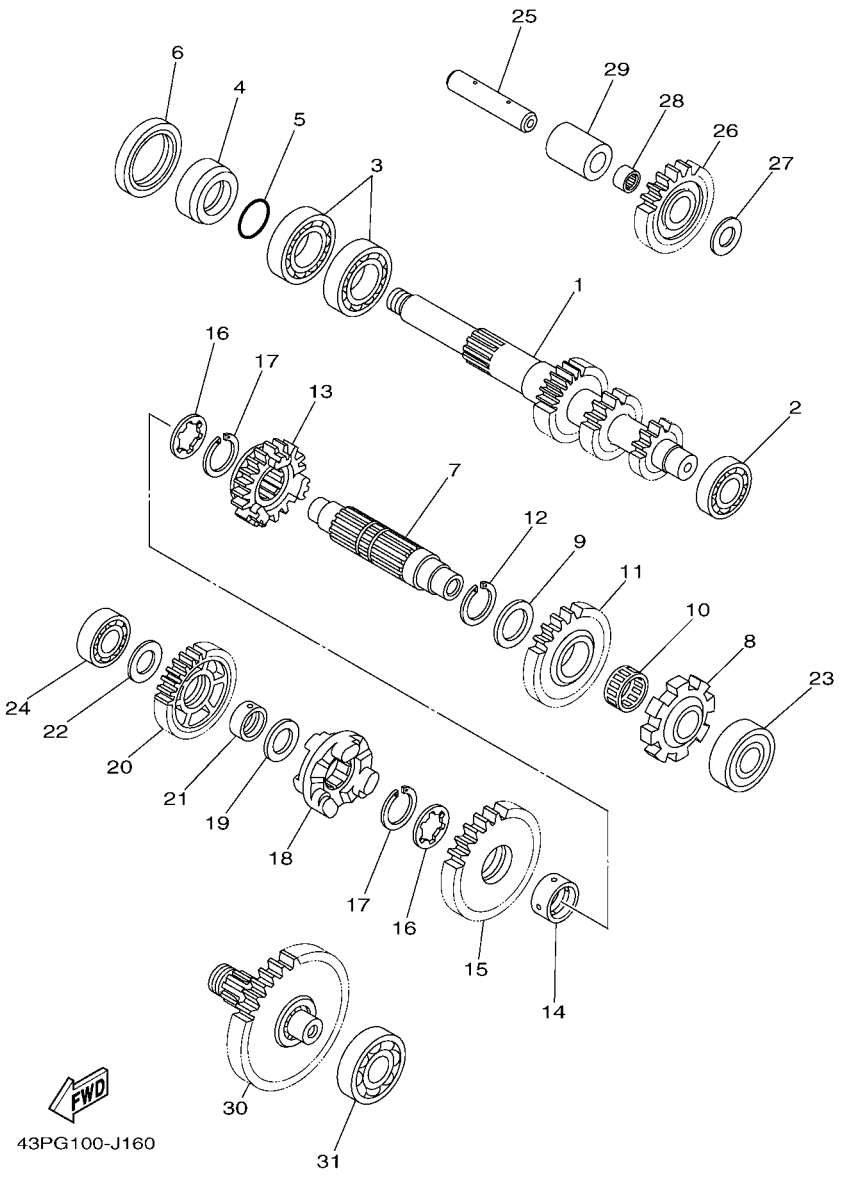

FIG. 16 TRANSMISSION

REF. NO.	PART NO.	DESCRIPTION	USA					REMARKS
28	93310–31576	BEARING	1					
29	90387–15018	COLLAR	1					
30	3B4–17520–00	DRIVE PINION ASSY (41T)	1					
31	93306–30438	BEARING	1					

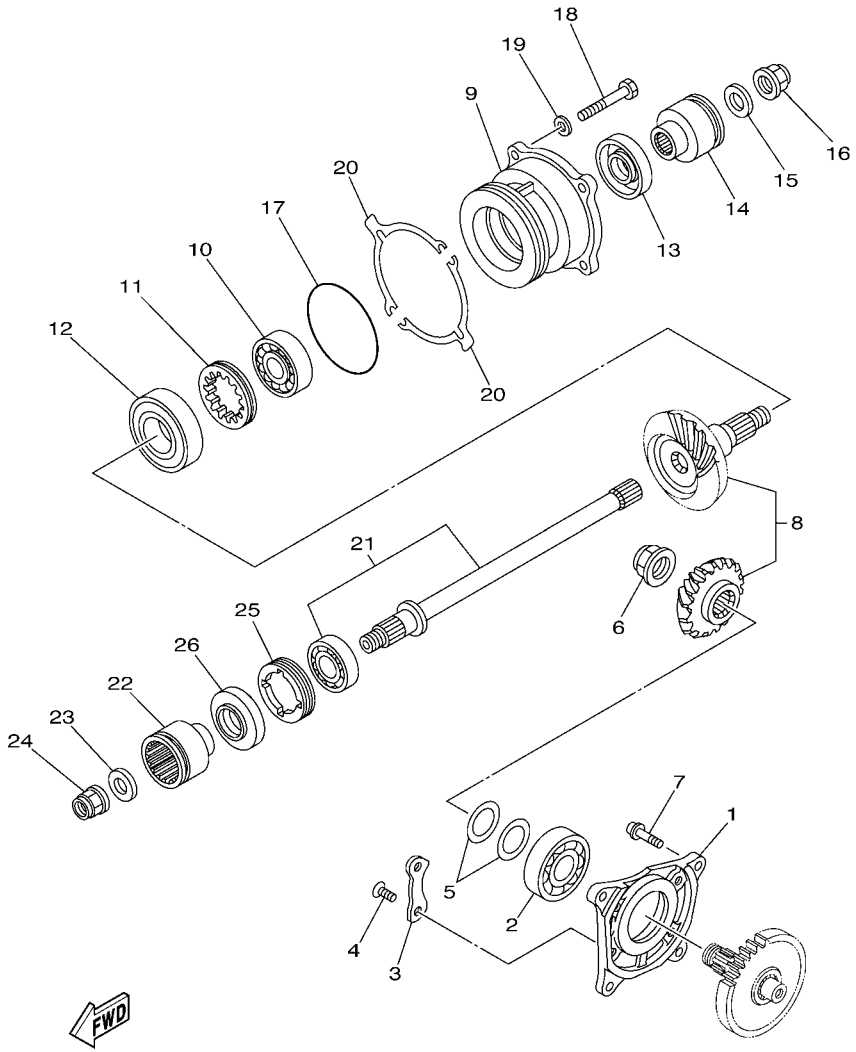

3B49100-G170

FIG. 17 MIDDLE DRIVE GEAR

REF. NO.	PART NO.	DESCRIPTION	USA					REMARKS
1	3B4–17521–00	HOUSING, BEARING	1					
2	93306–30537	BEARING	1					
3	11H–15383–02	PLATE, BEARING COVER	2					
4	90149–08013	SCREW	4					
5	5KM–17531–50	SHIM, PINION (0.5T)	2					UR
	5KM–17531–60	SHIM, PINION (0.55T)	2					UR
	5KM–17531–70	SHIM, PINION (0.6T)	2					UR
	5KM–17531–80	SHIM, PINION (0.7T)	2					UR
	5KM–17531–90	SHIM, PINION (0.8T)	2					UR
	5KM–17531–A0	SHIM, PINION (0.9T)	2					UR
	5KM–17531–B0	SHIM, PINION (1.0T)	2					UR
6	90179–22013	NUT	1					
7	90110–08091	BOLT, HEXAGON SOCKET HEAD	4					
8	3B4–17530–01	PINION SET	1					
9	3B4–17551–00	HOUSING, BEARING	1					
10	93306–37206	BEARING	1					
11	90179–60001	NUT	1					
12	93306–20654	BEARING	1					
13	93102–30010	OIL SEAL	1					
14	3B4–17832–10	COUPLING	1					
15	90201–16021	WASHER, PLATE	1					
16	90179–16006	NUT	1					
17	93210–78544	O-RING	1					
18	97022–08030	BOLT	4					
19	92902–08600	WASHER, PLATE	4					
20	3B4–17531–00	SHIM, PINION (0.1T)	2					UR
	3B4–17531–10	SHIM, PINION (0.15T)	2					UR

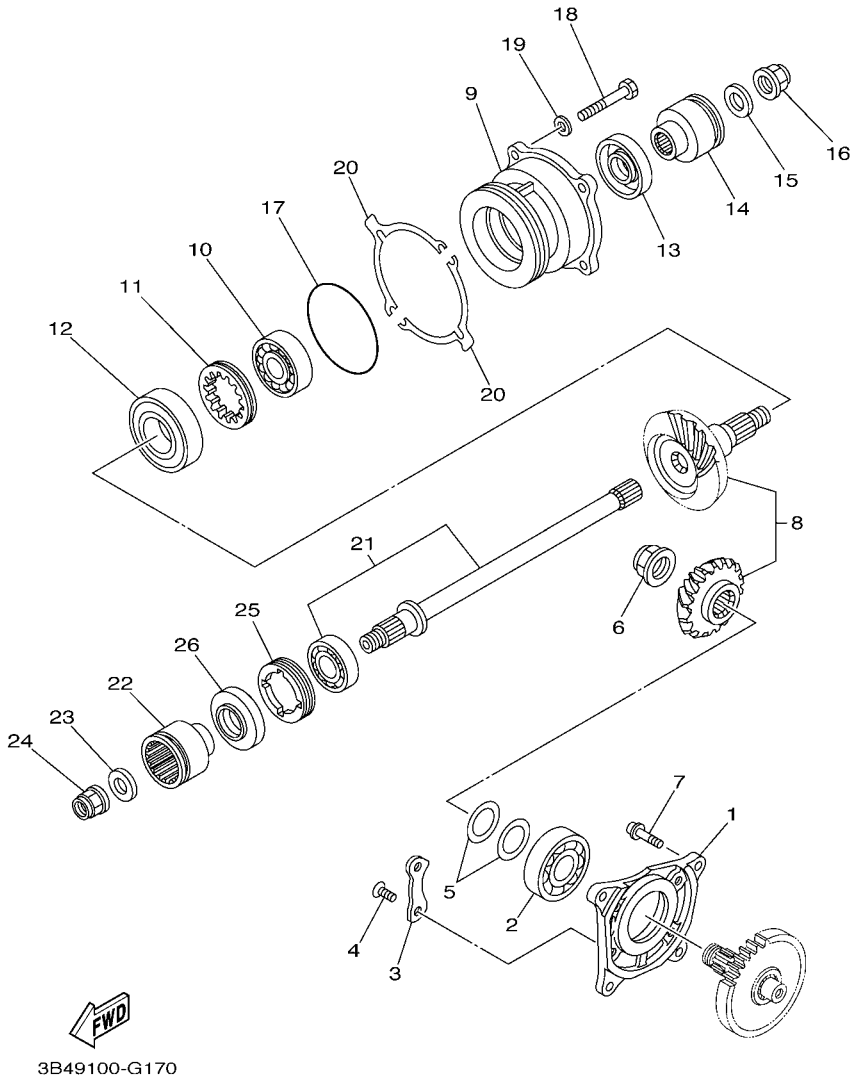

FIG. 17 MIDDLE DRIVE GEAR

REF. NO.	PART NO.	DESCRIPTION	USA					REMARKS
20	3B4–17531–20	SHIM, PINION (0.2T)	2					UR
	3B4–17531–30	SHIM, PINION (0.3T)	2					UR
	3B4–17531–40	SHIM, PINION (0.4T)	2					UR
	3B4–17531–50	SHIM, PINION (0.5T)	2					UR
	3B4–17531–60	SHIM, PINION (0.6T)	2					UR
21	3B4–1755A–00	MIDDLE DRIVEN SHAFT ASSY	1					
22	3B4–17832–10	COUPLING	1					
23	90201–16021	WASHER, PLATE	1					
24	90179–16006	NUT	1					
25	90179–55660	NUT	1					
26	93102–30010	OIL SEAL	1					

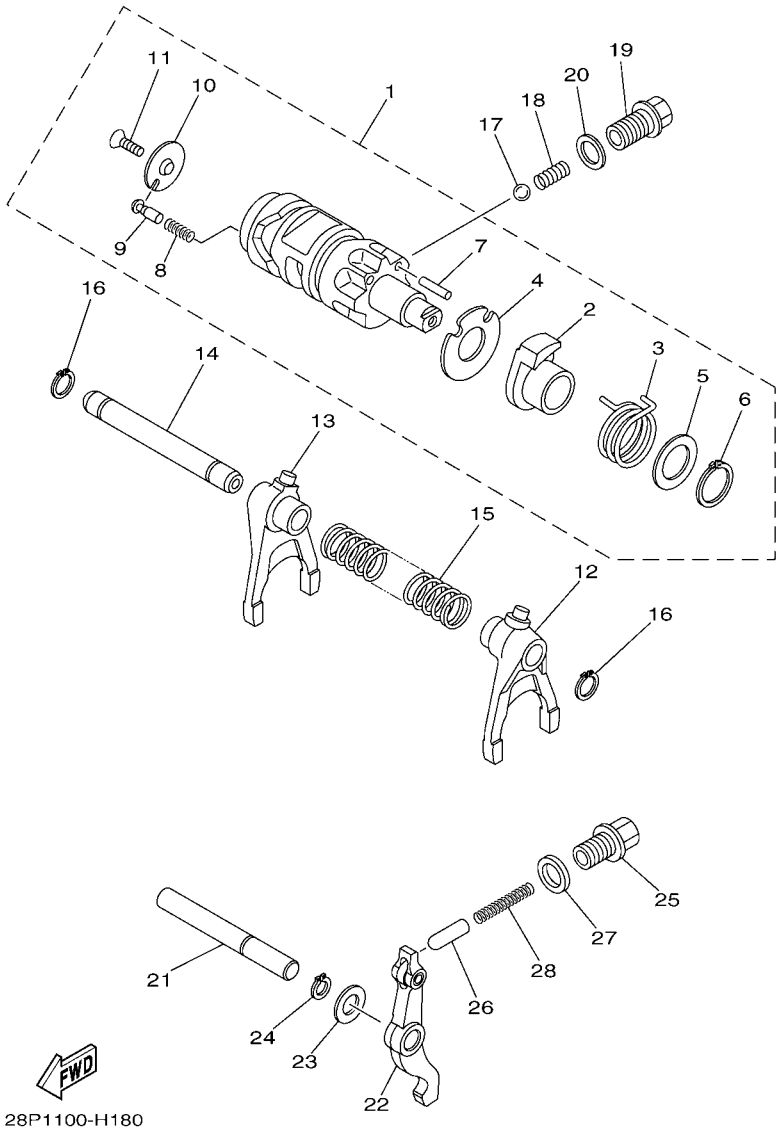

FIG. 18 SHIFT CAM & FORK

REF. NO.	PART NO.	DESCRIPTION	USA					REMARKS
1	3B4–18540–20	SHIFT CAM ASSY	1					
2	5KM–18171–00	.CAM, LEVER	1					
3	90508–32132	.SPRING, TORSION	1					
4	3B4–18331–00	.PLATE, SHIFT CAM	1					
5	90560–20040	.SPACER	1					
6	93410–20038	.CIRCLIP	1					
7	93604–18100	.PIN, DOWEL	1					
8	90501–06022	.SPRING, COMPRESSION	1					
9	5KM–18542–00	.POINT, NEUTRAL	1					
10	4UN–18566–00	.PLATE, SIDE 2	1					
11	90149–05016	.SCREW	1					
12	3B4–18511–11	FORK, SHIFT 1	1					
13	3B4–18512–11	FORK, SHIFT 2	1					
14	3B4–18531–00	BAR, SHIFT FORK GUIDE 1	1					
15	90501–140A2	SPRING, COMPRESSION	1					
16	99009–12400	CIRCLIP	2					
17	93503–08007	BALL	1					
18	90501–10353	SPRING, COMPRESSION	1					
19	90105–14003	BOLT, FLANGE	1					
20	90430–14194	GASKET	1					
21	3B4–18318–00	SHAFT, SHIFTER	1					
22	28P–18140–01	STOPPER LEVER ASSY	1					
23	90201–127J6	WASHER, PLATE	1					
24	99009–12400	CIRCLIP	1					
25	90109–14002	BOLT	1					
26	1J7–18547–00	STOPPER, CAM	1					
27	90430–14043	GASKET	1					

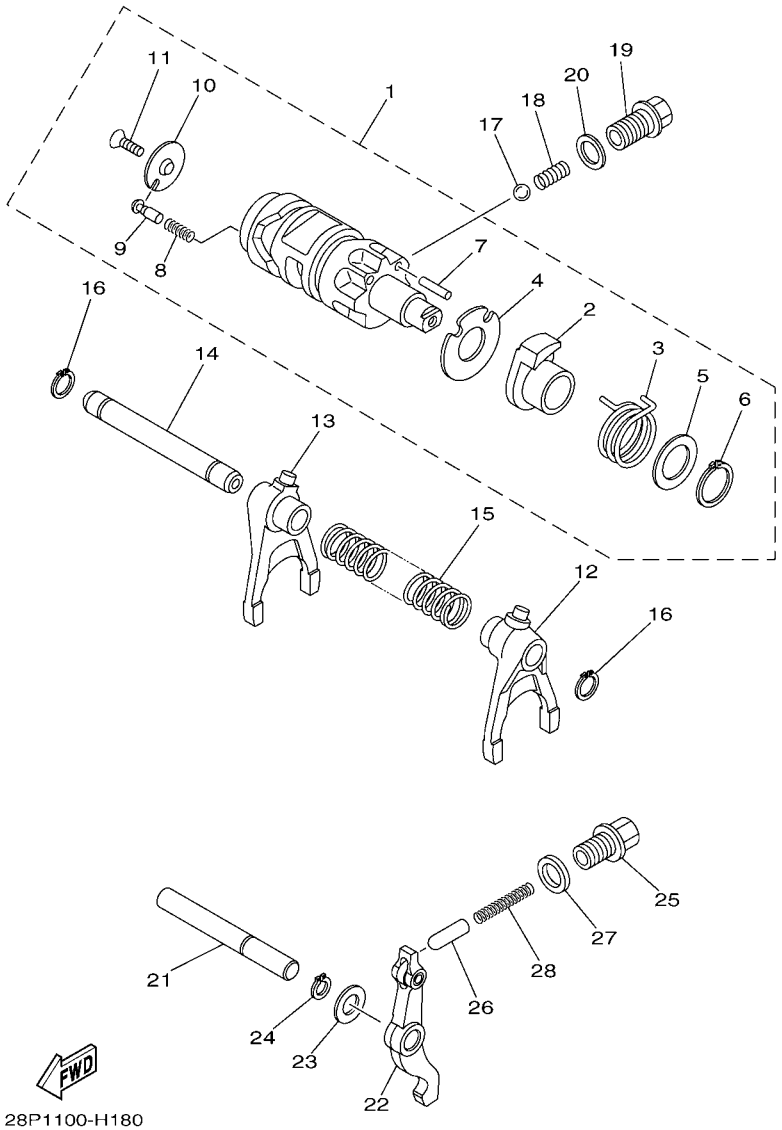

FIG. 18 SHIFT CAM & FORK

REF. NO.	PART NO.	DESCRIPTION	USA					REMARKS
28	90501–090A1	SPRING, COMPRESSION	1					

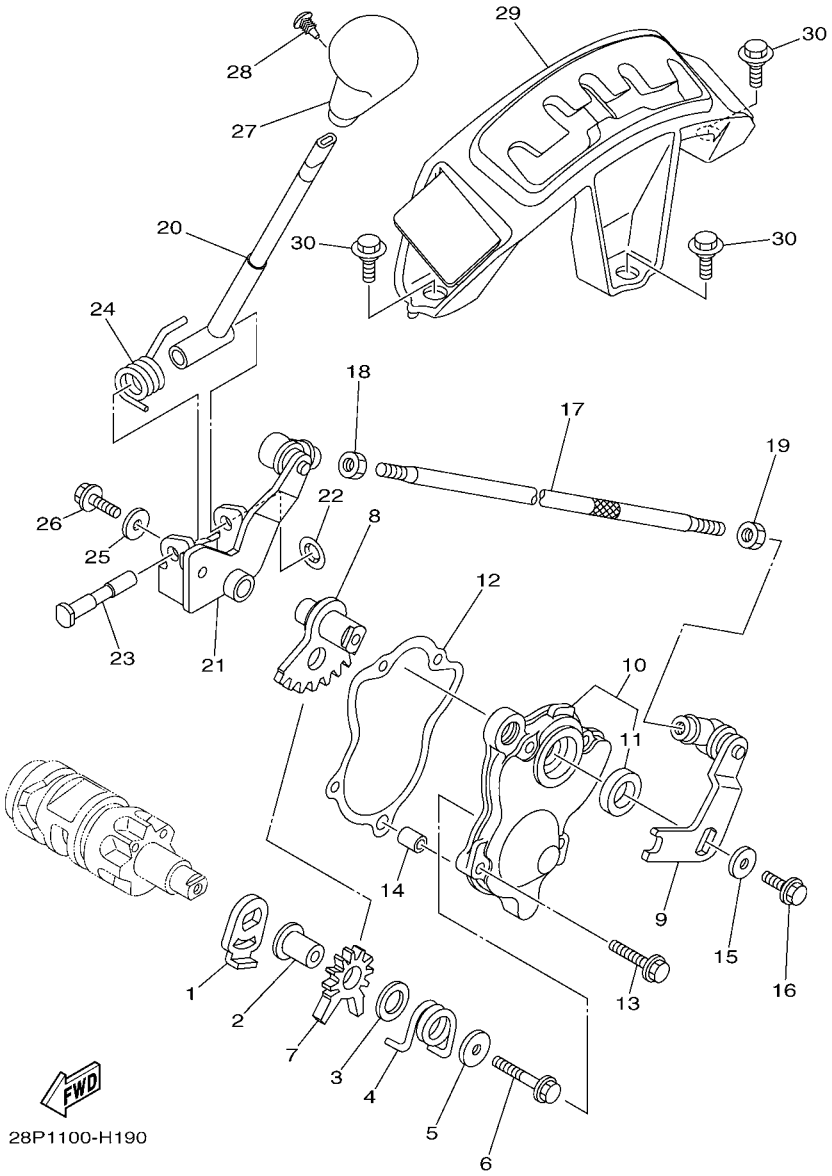

FIG. 19 SHIFT SHAFT

REF. NO.	PART NO.	DESCRIPTION	USA					REMARKS
1	4SH–18198–00	LEVER	1					
2	90387–0613B	COLLAR	1					
3	90201–132G5	WASHER, PLATE	1					
4	90508–32117	SPRING, TORSION	1					
5	90201–06036	WASHER, PLATE	1					
6	95812–06035	BOLT, FLANGE	1					
7	5KM–18191–00	LEVER	1					
8	3B4–18103–11	SHIFT SHAFT COMP.	1					
9	28P–18104–00	SHIFT GUIDE COMP.	1					
10	3B4–18380–00	SHIFTER BRKT. ASSY	1					
11	93102–15212	.OIL SEAL	1					
12	3B4–18146–00	GASKET	1					
13	95022–06020	BOLT, FLANGE	4					
14	99530–08012	PIN, DOWEL	1					
15	90201–06036	WASHER, PLATE	1					
16	90105–06176	BOLT, FLANGE	1					
17	28P–18115–00	ROD, SHIFT	1					
18	90170–06228	NUT(COUNTER CLOCKWISE)	1					
19	95312–06700	NUT	1					
20	3B4–18190–20	LEVER COMP. 1	1					
21	3B4–18169–20	ARM, SHIFT 2	1					
22	90183–080A1	NUT, SPRING	1					
23	3B4–18125–00	SHAFT, SHIFT	1					
24	3B4–18196–00	SPRING, RETURN	1					
25	90201–06036	WASHER, PLATE	1					
26	95812–06016	BOLT, FLANGE	1					
27	28P–18174–00	KNOB, SHIFT LEVER	1					

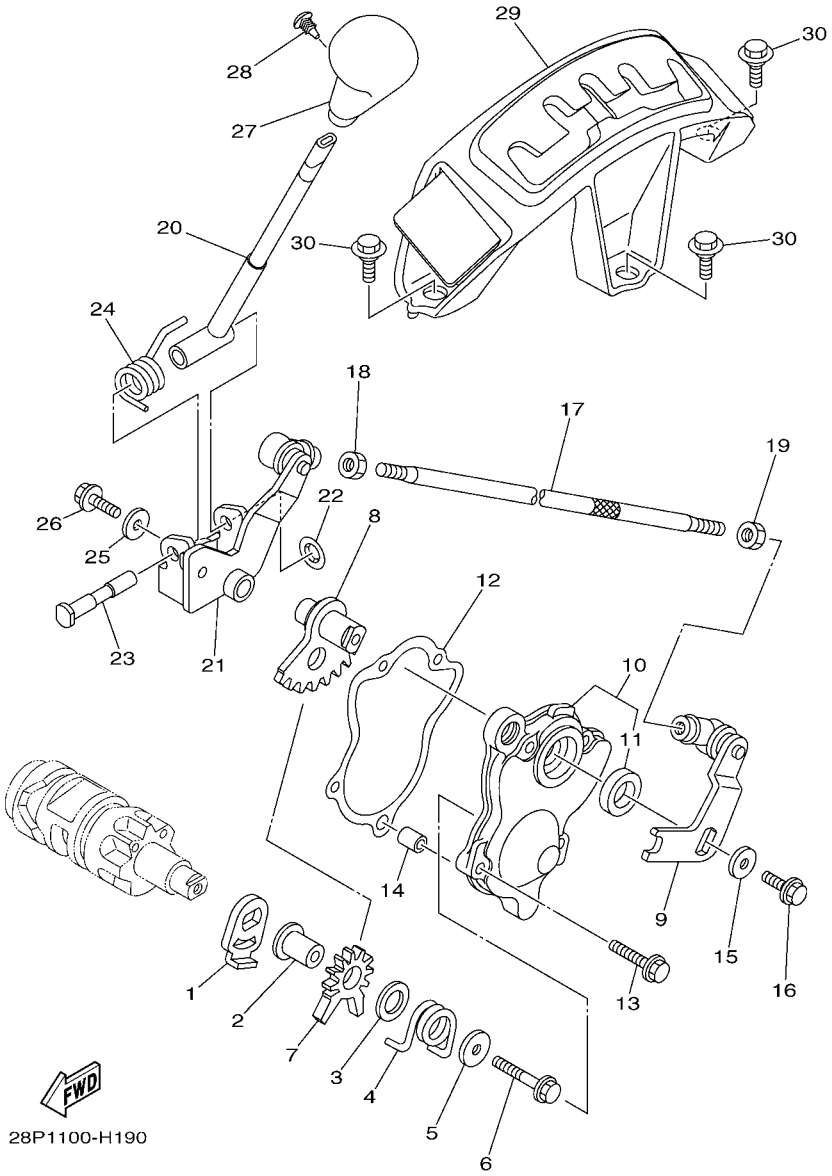

FIG. 19 SHIFT SHAFT

REF. NO.	PART NO.	DESCRIPTION	USA					REMARKS
28	90269–05055	RIVET	1					
29	3B4–18160–00	SHIFT GUIDE ASSY	1					
30	90109–06172	BOLT	3					

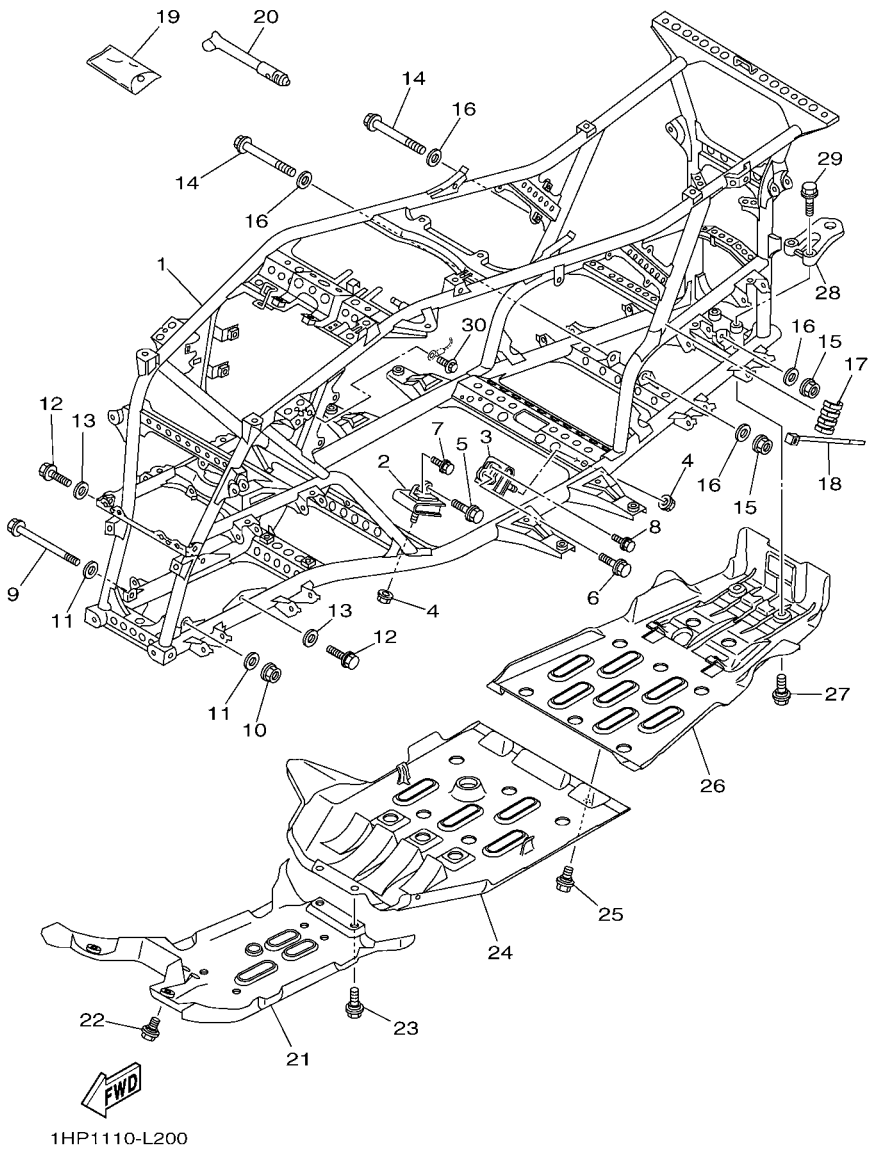

FIG. 20 FRAME

REF. NO.	PART NO.	DESCRIPTION	USA					REMARKS
1	1HP–F1110–00	FRAME COMP.	1					
2	3B4–21485–00	DAMPER, RUBBER 1	2					
3	3B4–21485–00	DAMPER, RUBBER 1	2					
4	90185–10011	NUT, SELF-LOCKING	4					
5	95812–10035	BOLT, FLANGE	2					
6	95812–10035	BOLT, FLANGE	2					
7	90105–06639	BOLT, FLANGE	2					
8	90105–06639	BOLT, FLANGE	2					
9	90105–10219	BOLT, FLANGE	1					
10	90185–10011	NUT, SELF-LOCKING	1					
11	90201–10035	WASHER, PLATE	2					
12	90105–10237	BOLT, FLANGE	2					
13	90201–10035	WASHER, PLATE	2					
14	90105–10238	BOLT, FLANGE	2					
15	90185–10011	NUT, SELF-LOCKING	2					
16	90201–10035	WASHER, PLATE	4					
17	3B4–2113B–01	DAMPER	1					
18	90464–40825	CLAMP	1					
19	1HP–F8100–00	TOOL KIT	1					
20	1NV–2811A–01	GAUGE, AIR	1					
21	1HP–F147A–00	GUARD, ENGINE 1	1					
22	90109–06202	BOLT	2					
23	90109–06214	BOLT	2					
24	1HP–F147E–00	GUARD, ENGINE 2	1					
25	90109–06214	BOLT	2					
26	1HP–F147F–00	GUARD, ENGINE 3	1					
27	90109–06202	BOLT	2					

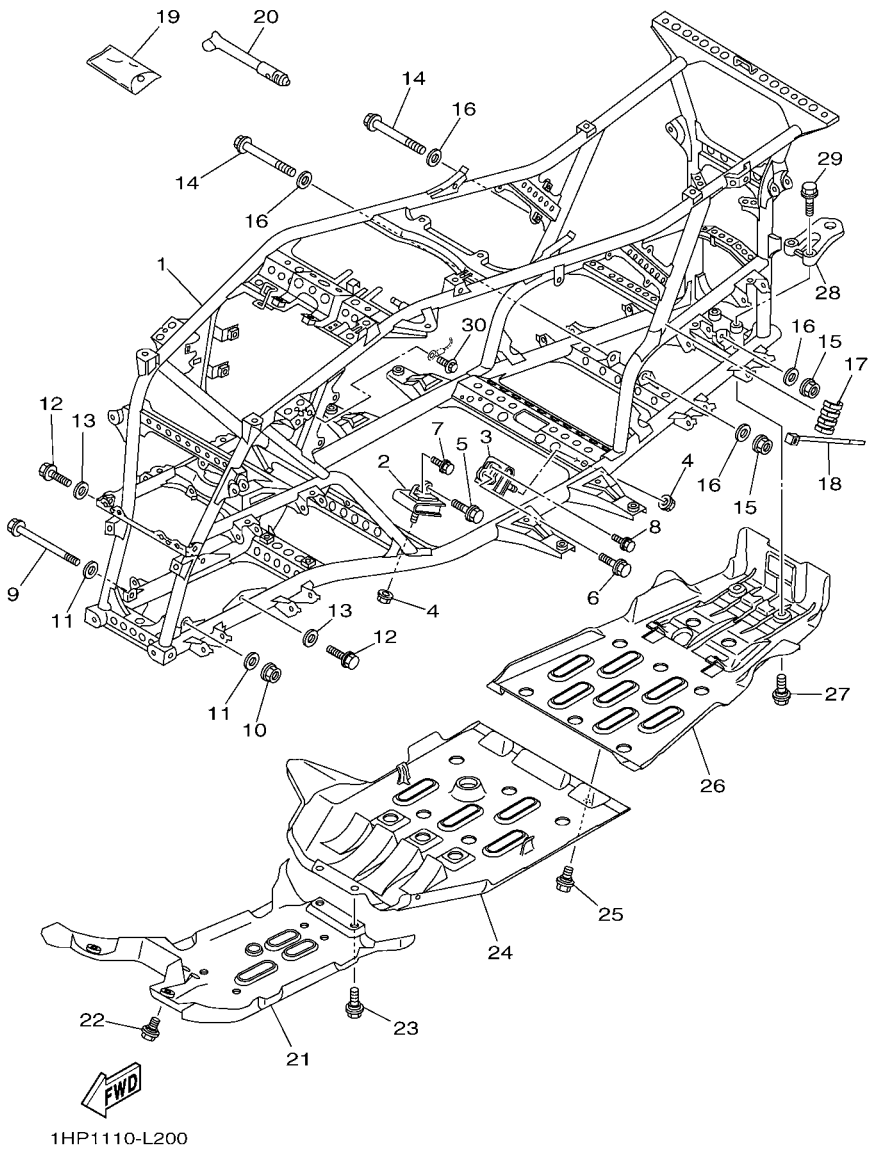

FIG. 20 FRAME

REF. NO.	PART NO.	DESCRIPTION	USA					REMARKS
28	1HP–F8488–00	HOOK	1					
29	95812–10035	BOLT, FLANGE	2					
30	95812–06012	BOLT, FLANGE	1					

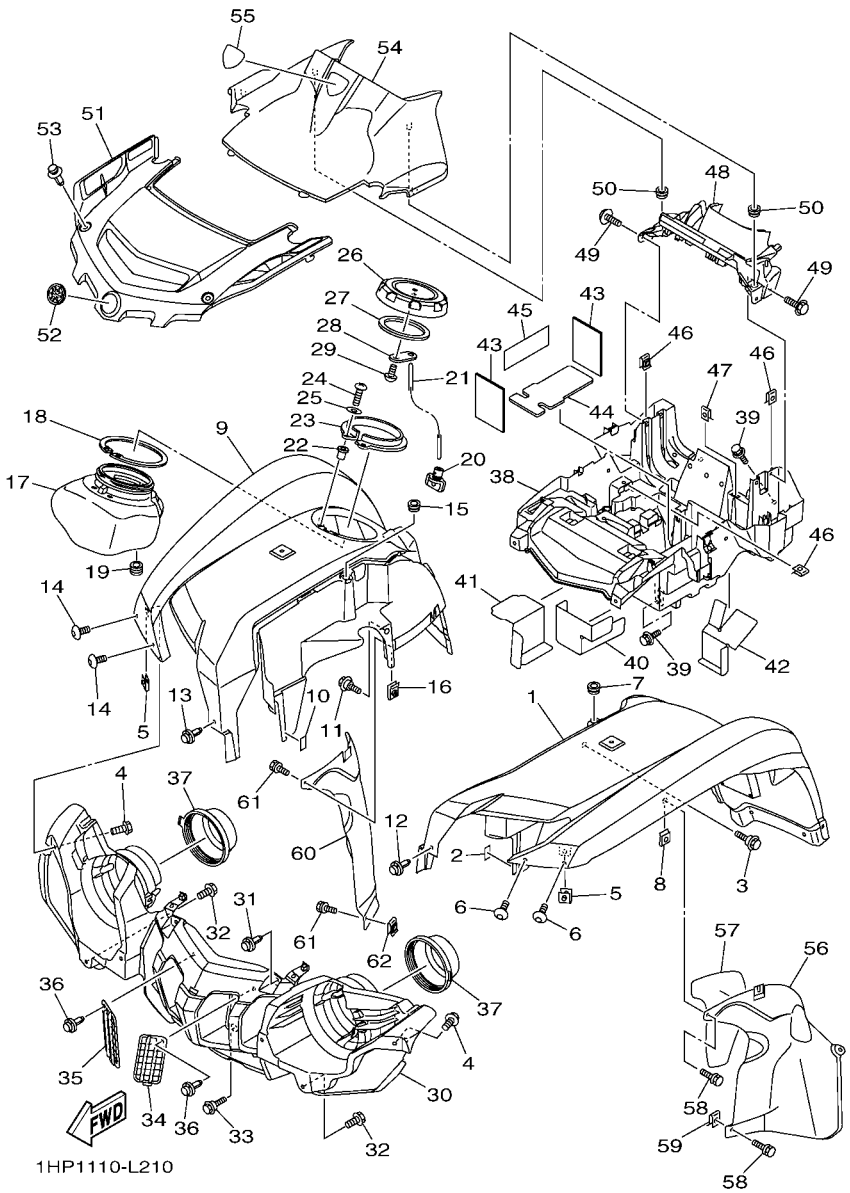

FIG. 21 FRONT FENDER

REF. NO.	PART NO.	DESCRIPTION	USA					REMARKS
1	1HP–F1500–50	FRONT FENDER ASSY	1					
2	3B4–21541–00	DAMPER 1	1					
3	90109–06172	BOLT	1					
4	90119–05193	BOLT, WITH WASHER	2					
5	90183–051A0	NUT, SPRING	2					
6	90149–05034	SCREW	2					
7	90480–13398	GROMMET	1					
8	90183–06053	NUT, SPRING	1					
9	1HP–F1501–00	FRONT FENDER COMP.	1					
10	3B4–21541–00	DAMPER 1	1					
11	90109–06172	BOLT	1					
12	90269–07012	RIVET	1					
13	90269–07012	RIVET	1					
14	90149–05034	SCREW	2					
15	90480–13398	GROMMET	1					
16	90183–06053	NUT, SPRING	1					
17	1HP–F838K–00	BOX 1	1					
18	3B4–2838M–00	SEAL, BOX 1	1					
19	90480–13004	GROMMET	1					
20	3B4–215A1–00	PLUG, DRAIN	1					
21	3B4–2845L–00	STOPPER, OPEN	1					
22	90179–05523	NUT	2					
23	3B4–2839N–00	HOLDER	1					
24	98502–05016	SCREW, PAN HEAD	2					
25	92902–05600	WASHER, PLATE	2					
26	1HP–F151B–00	CAP	1					
27	3B4–28307–00	SEAL	1					

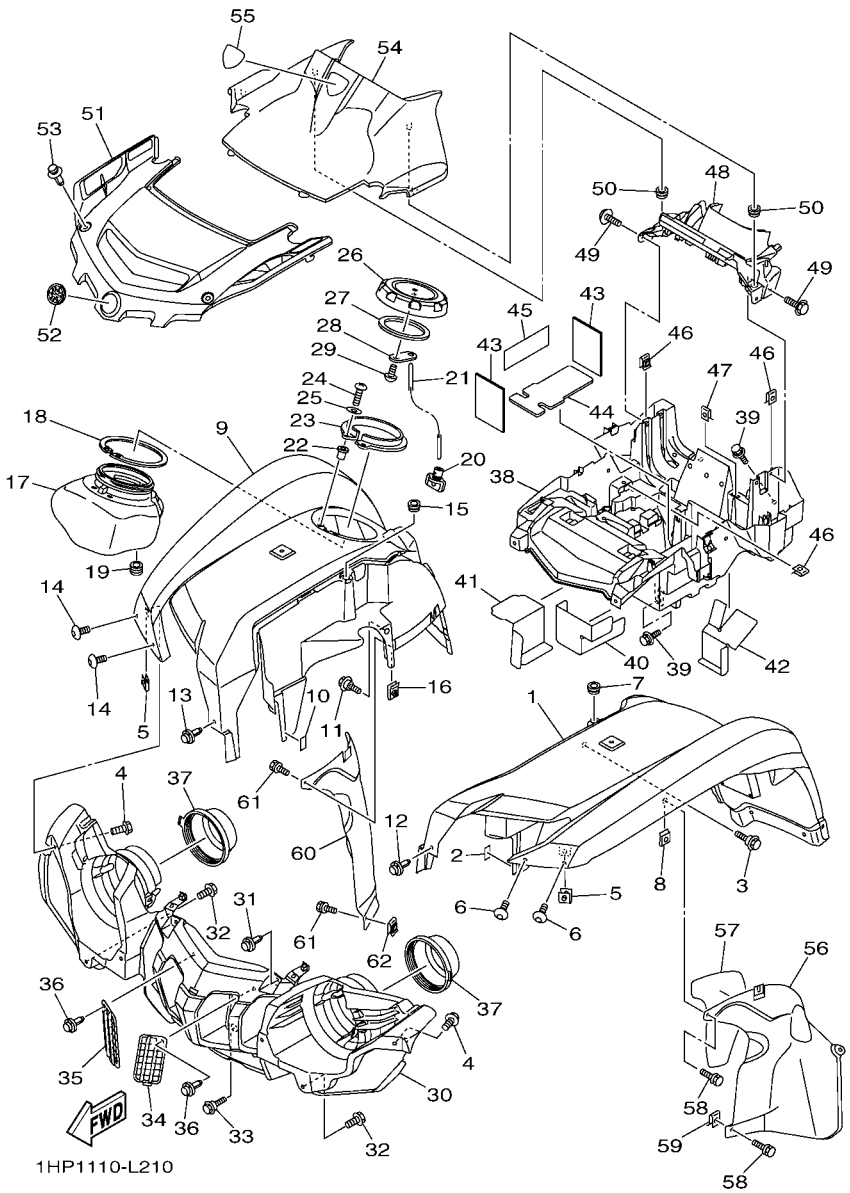

FIG. 21 FRONT FENDER

REF. NO.	PART NO.	DESCRIPTION	USA					REMARKS
28	3B4–28487–00	PLATE 2	1					
29	90164–05800	SCREW, TAPPING	1					
30	1HP–F8309–00	GRILLE, FRONT	1					
31	90269–07010	RIVET	2					
32	90119–05193	BOLT, WITH WASHER	2					
33	90109–06172	BOLT	2					
34	3B4–2837N–00	GRILL, AIR INTAKE 1	1					
35	3B4–2837R–00	GRILL, AIR INTAKE 2	1					
36	90269–07077	RIVET	2					
37	3B4–28349–00	CAP	2					
38	1HP–H212B–00	BOX, BATTERY 1	1					
39	90119–06152	BOLT, WITH WASHER	3					
40	1HP–H253E–00	INSULATOR 1	1					
41	1HP–H253F–00	INSULATOR 2	1					
42	1HP–H254E–00	INSULATOR	1					
43	3B4–8233W–10	INSU.	2					
44	3B4–82122–00	SEAT, BATTERY	1					
45	1HP–H2176–00	DAMPER	1					
46	90183–06053	NUT, SPRING	5					
47	90183–05008	NUT, SPRING	2					
48	1HP–F837L–00	PANEL, CONSOLE 1	1					
49	90119–06152	BOLT, WITH WASHER	4					
50	90480–13567	GROMMET	2					
51	1HP–F3391–00	PANEL, FRONT	1					
52	5FU–F175B–01	TUNING FORK MARK	1					
53	90269–07010	RIVET	2					
54	1HP–F8313–00	LID	1					

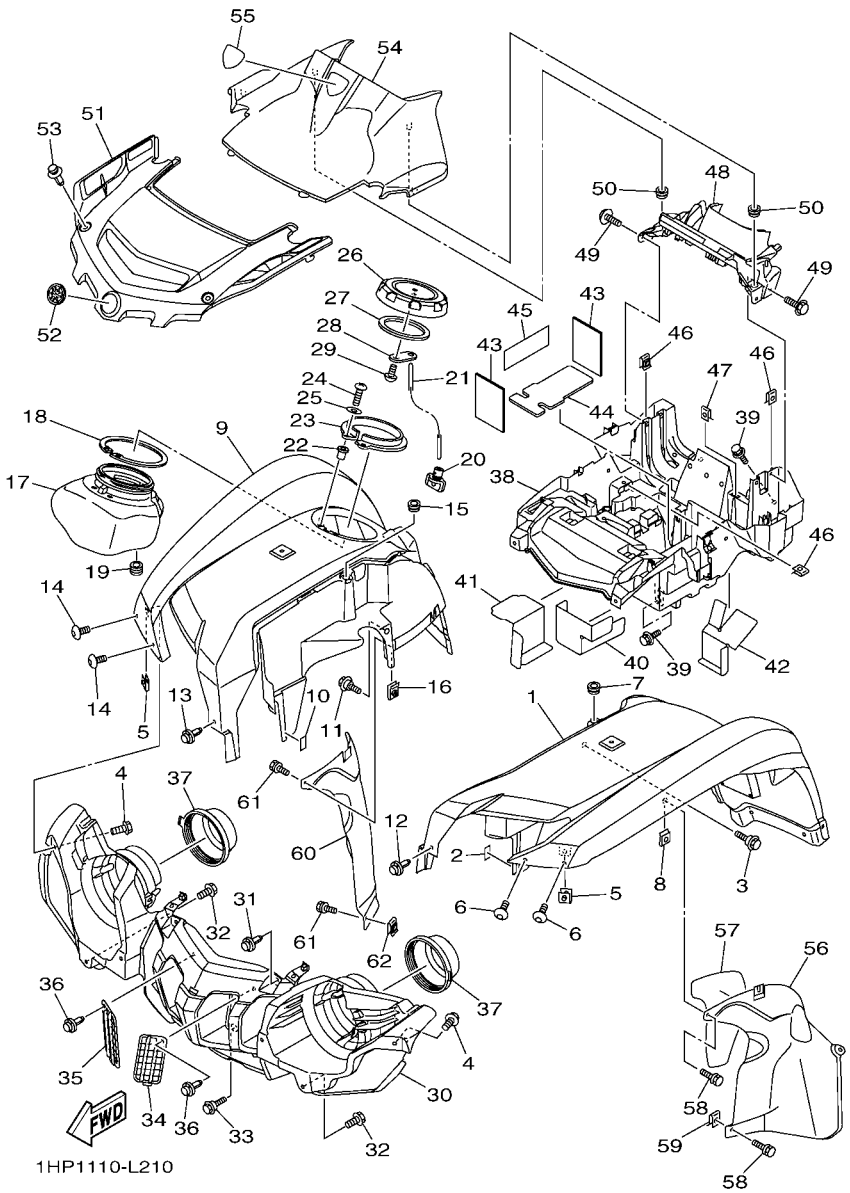

FIG. 21 FRONT FENDER

REF. NO.	PART NO.	DESCRIPTION	USA					REMARKS
55	3B4–26232–01	EMBLEM 3D	1					
56	1HP–F1552–00	FENDER, INNER	1					
57	1HP–F1575–00	SEAL 1	1					
58	90119–06152	BOLT, WITH WASHER	2					
59	90183–06053	NUT, SPRING	1					
60	1HP–F1553–00	FENDER, INNER 2	1					
61	90119–06152	BOLT, WITH WASHER	3					
62	90183–06053	NUT, SPRING	2					

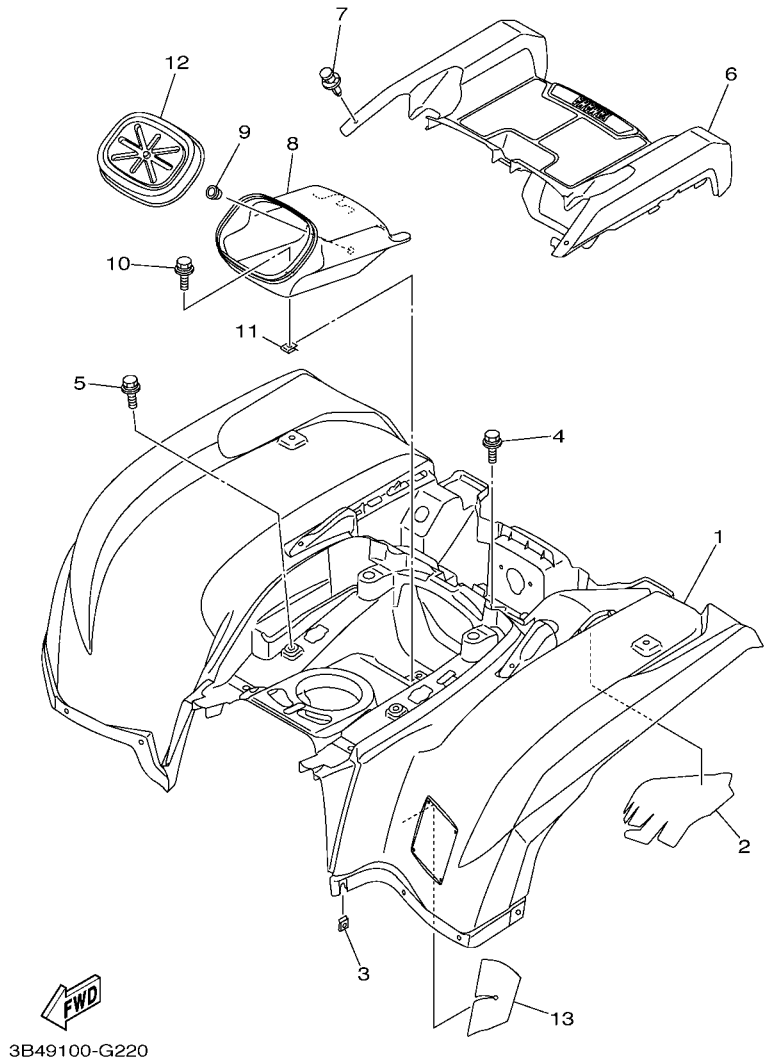

FIG. 22 REAR FENDER

REF. NO.	PART NO.	DESCRIPTION	USA					REMARKS
1	1HP–F1600–50	REAR FENDER ASSY.	1					
2	3B4–21652–00	PROTECTOR	1					
3	90183–06053	NUT, SPRING	1					
4	90119–06152	BOLT, WITH WASHER	2					
5	90119–06152	BOLT, WITH WASHER	2					
6	1HP–F1651–00	COVER, REAR FENDER	1					
7	90269–07010	RIVET	2					
8	1HP–F160E–00	BOX	1					
9	90338–09130	PLUG	1					
10	90119–06152	BOLT, WITH WASHER	1					
11	90183–06053	NUT, SPRING	1					
12	1HP–F160F–00	LID	1					
13	1HP–F1669–00	SEAL	1					

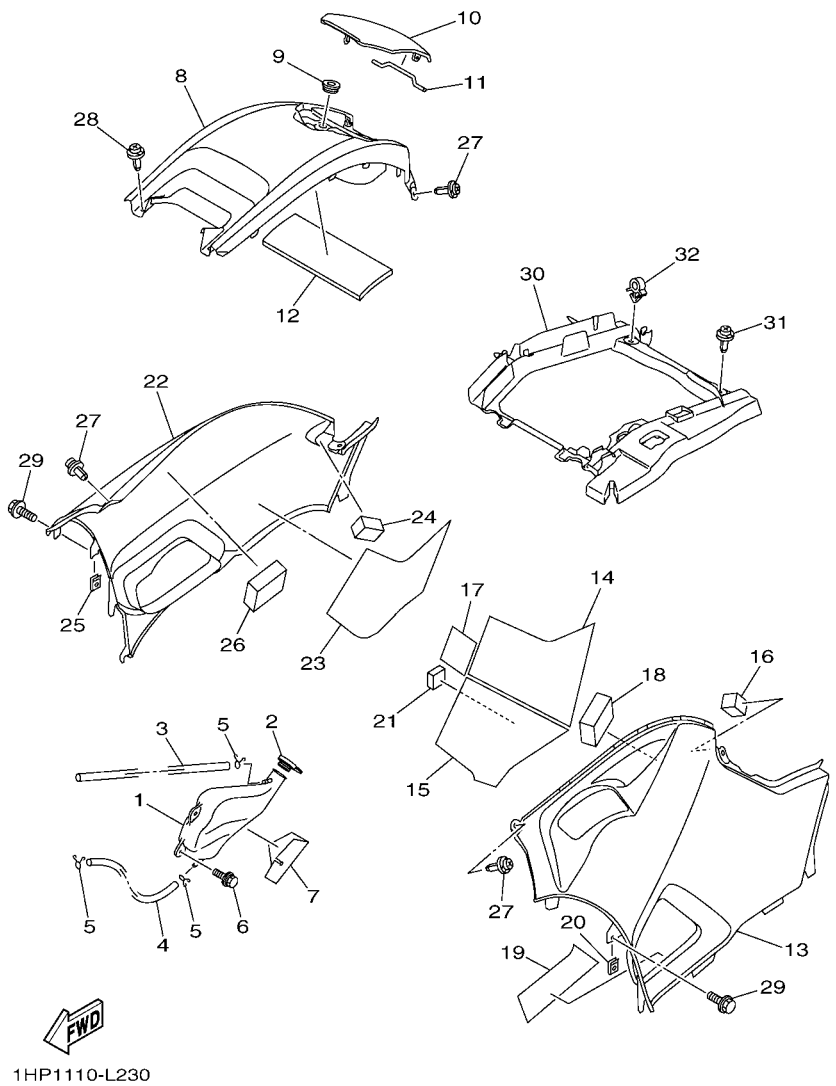

FIG. 23 SIDE COVER

REF. NO.	PART NO.	DESCRIPTION	USA					REMARKS
1	1HP–F1871–00	TANK, RECOVERY	1					
2	1S3–21875–00	CAP	1					
3	90445–08841	HOSE (L540)	1					
4	90445–08840	HOSE (L420)	1					
5	90467–08003	CLIP	3					
6	90119–06152	BOLT, WITH WASHER	2					
7	1HP–F176E–00	PLATE	1					
8	1HP–F171A–00	COVER, TOP	1					
9	90480–01558	GROMMET	1					
10	1HP–F177B–00	LID, COVER	1					
11	3B4–2177K–00	PIN, HINGE	1					
12	3B4–21747–01	DAMPER	1					
13	1HP–F17E0–00	SIDE COVER COMP. 1	1					
14	3B4–2174A–00	INSULATOR, SIDE COVER	1					
15	3B4–2173N–00	SEAL 4	1					
16	3B4–21717–00	DAMPER	1					
17	1S3–82123–00	SEAT, BATTERY	1					
18	3B4–2174Y–00	DAMPER	1					
19	3B4–2173M–00	SEAL 3	1					
20	90183–06053	NUT, SPRING	1					
21	3B4–2177N–00	DAMPER, LOCATING 4	1					
22	1HP–F17F0–00	SIDE COVER COMP. 2	1					
23	1HP–F174T–00	INSULATOR, SIDE COVER 2	1					
24	3B4–21717–00	DAMPER	1					
25	90183–06053	NUT, SPRING	1					
26	3B4–2174Y–00	DAMPER	1					
27	90269–07012	RIVET	4					

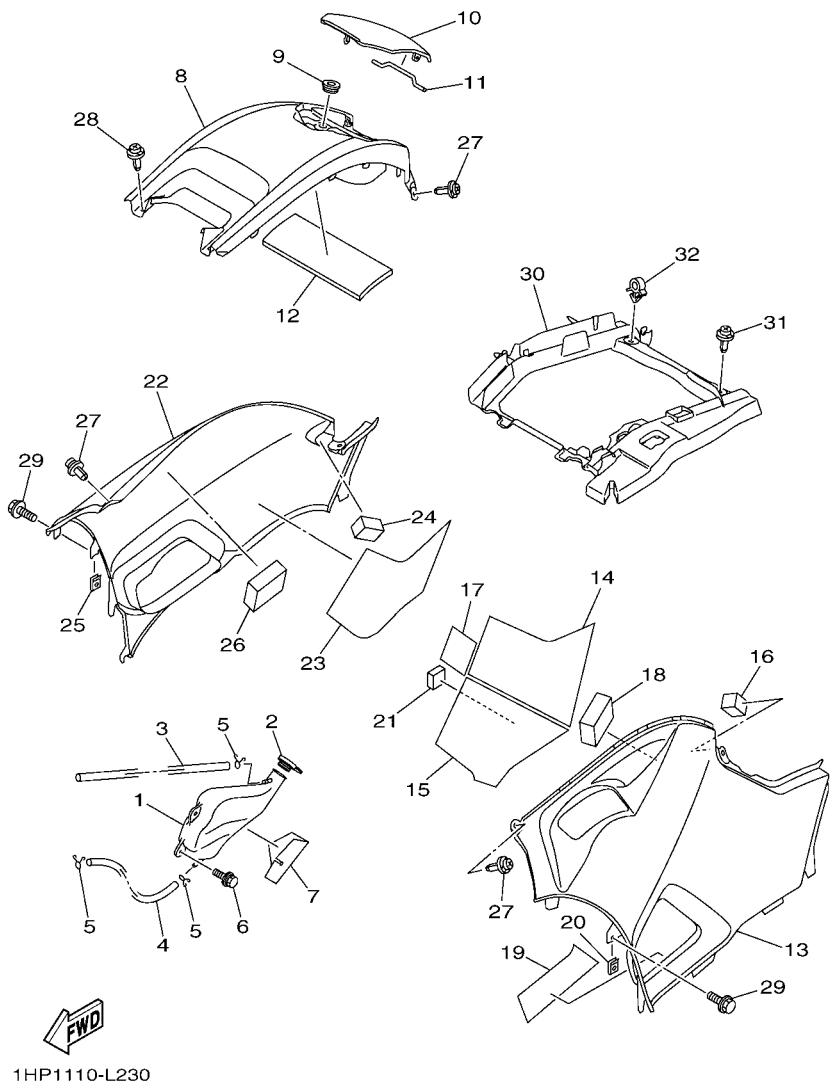

FIG. 23 SIDE COVER

REF. NO.	PART NO.	DESCRIPTION	USA					REMARKS
28	90269–06081	RIVET	2					
29	90119–06152	BOLT, WITH WASHER	2					
30	1HP–F414H–00	DAMPER, PLATE 1	1					
31	90269–07010	RIVET	1					
32	90464–15157	CLAMP	1					

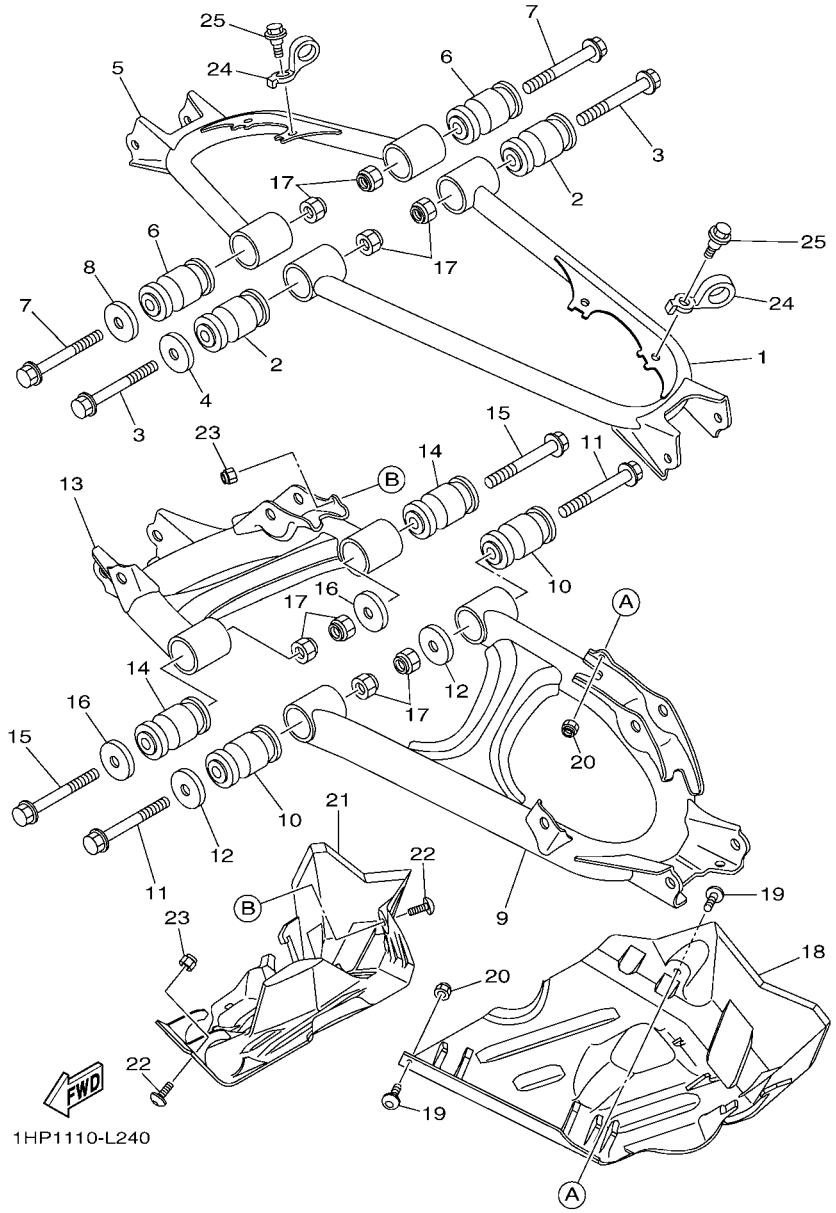

FIG. 24 REAR ARM

REF. NO.	PART NO.	DESCRIPTION	USA					REMARKS
1	1HP–F2171–00	ARM, REAR 1	1					
2	1HP–F3526–00	BUSH	2					
3	90105–10222	BOLT, FLANGE	2					
4	5KM–22149–10	WASHER	1					
5	1HP–F2172–00	ARM, REAR 2	1					
6	1HP–F3526–00	BUSH	2					
7	90105–10222	BOLT, FLANGE	2					
8	5KM–22149–10	WASHER	1					
9	1HP–F217M–00	ARM 1	1					
10	1HP–F3526–00	BUSH	2					
11	90105–10222	BOLT, FLANGE	2					
12	5KM–22149–10	WASHER	2					
13	1HP–F217N–00	ARM 2	1					
14	1HP–F3526–00	BUSH	2					
15	90105–10222	BOLT, FLANGE	2					
16	5KM–22149–10	WASHER	2					
17	90185–10012	NUT, SELF-LOCKING	8					
18	1HP–F2128–00	COVER, THRUST 1	1					
19	90111–06814	BOLT,HEX. SOCKET BUTTON	2					
20	95702–06300	NUT, NYLON	2					
21	1HP–F2129–00	COVER, THRUST 2	1					
22	90111–06814	BOLT,HEX. SOCKET BUTTON	2					
23	95702–06300	NUT, NYLON	2					
24	3B4–25875–00	HOLDER, BRAKE HOSE 1	4					
25	90109–06172	BOLT	4					

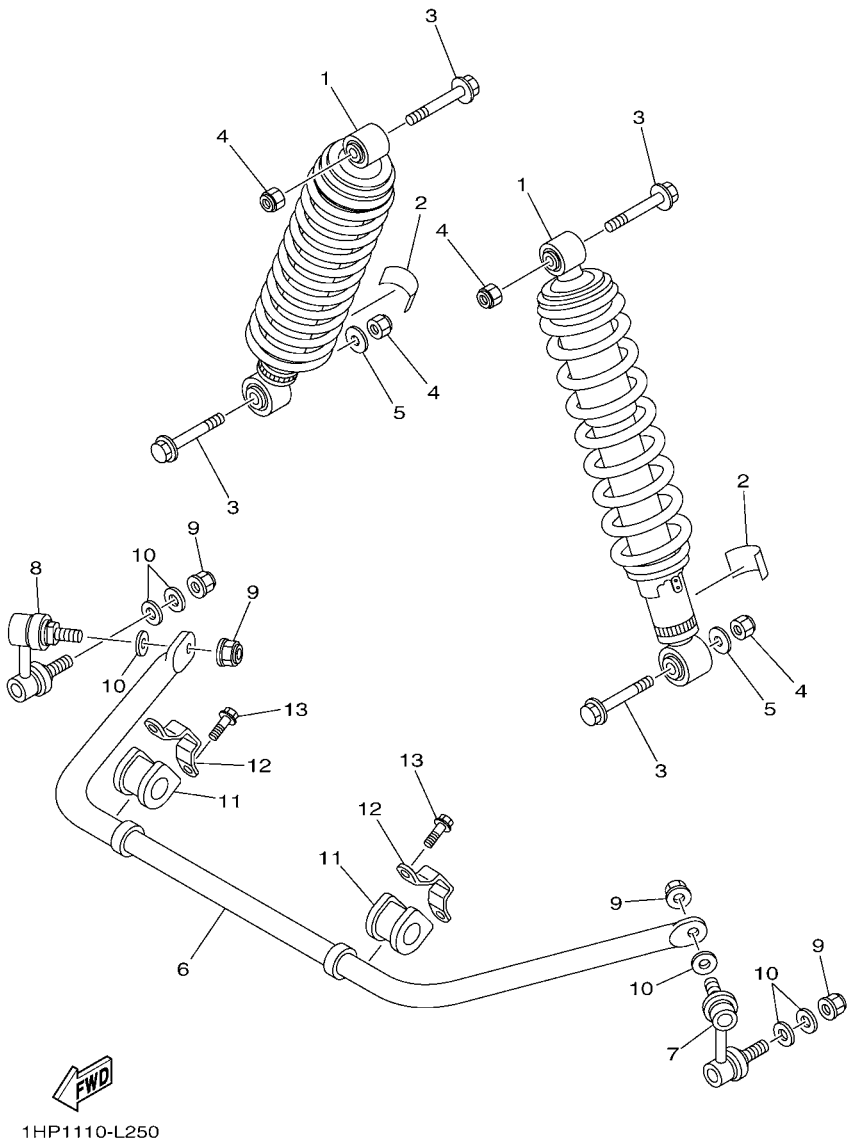

FIG. 25 REAR SUSPENSION

REF. NO.	PART NO.	DESCRIPTION	USA					REMARKS
1	1HP–F2210–01	SHOCK ABSORBER ASSY, REAR	2					
2	1HP–F2259–01	LABEL, WARNING	2					
3	90105–10131	BOLT, FLANGE	4					
4	90185–10012	NUT, SELF-LOCKING	4					
5	90201–10035	WASHER, PLATE	2					
6	1HP–G7491–00	BAR, STABILIZER	1					
7	16B–2385L–10	JOINT, STABILIZER 1	1					
8	16B–2385M–10	JOINT, STABILIZER 2	1					
9	95602–10200	NUT, U FLANGE	4					
10	90201–10035	WASHER, PLATE	6					
11	1HP–F386G–00	BUSH, STABILIZER FRONT	2					
12	1HP–F386H–00	COVER, STABILIZER FRONT	2					
13	95812–08014	BOLT, FLANGE	4					

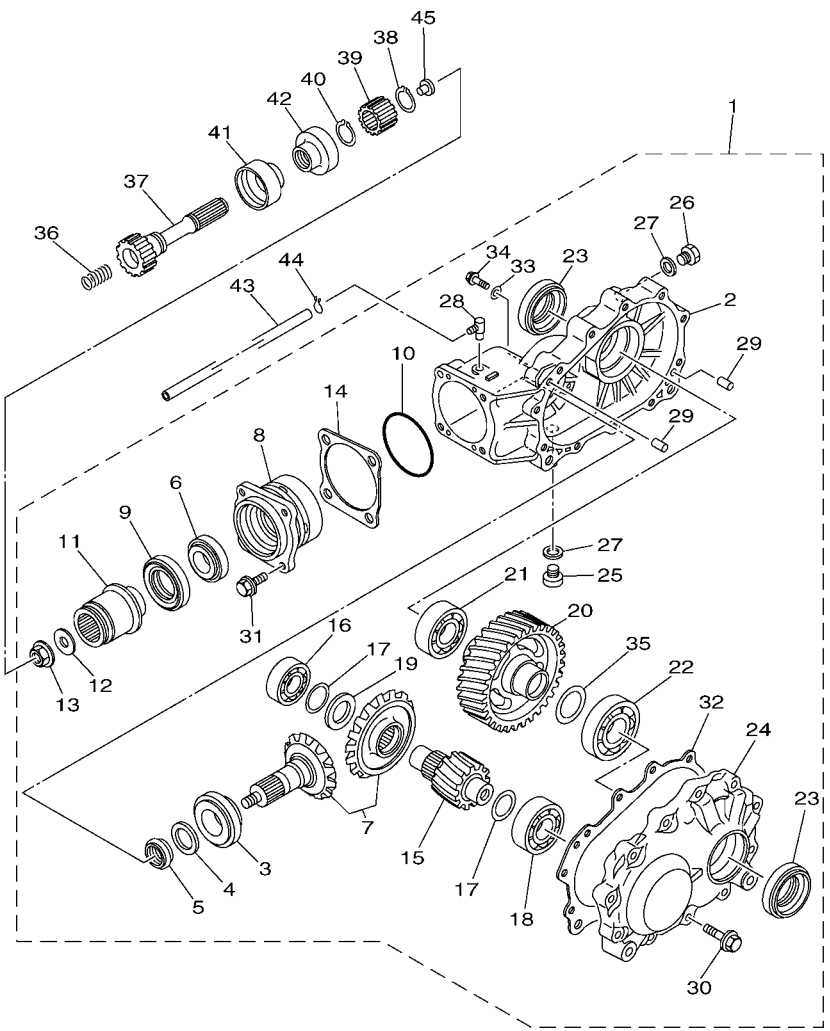

FIG. 26 DRIVE SHAFT

REF. NO.	PART NO.	DESCRIPTION	USA					REMARKS
1	1HP–46101–00	REAR AXLE GEAR CASE ASSY	1					
2	3B4–46151–00	.HOUSING, DRIVE SHAFT	1					
3	93332–00046	.BEARING	1					
4	90201–25634	.WASHER, PLATE	1					
5	3B4–46129–00	.SPACER, EXPANSION	1					
6	93332–00053	.BEARING	1					
7	3B4–461A0–00	.RING GEAR SET	1					
8	3B4–46144–00	.HOUSING, PINION BEARING	1					
9	93102–35380	.OIL SEAL	1					
10	93210–626A7	.O-RING	1					
11	3B4–46126–10	.COUPLING	1					
12	90201–12029	.WASHER, PLATE	1					
13	90179–12005	.NUT	1					
14	2HR–46127–00–25	.SHIM, DRIVE PISTON (0.25T)	1					UR
	2HR–46127–00–30	.SHIM, DRIVE PISTON (0.30T)	1					UR
	2HR–46127–00–35	.SHIM, DRIVE PISTON (0.35T)	1					UR
	2HR–46127–00–40	.SHIM, DRIVE PISTON (0.40T)	1					UR
	2HR–46127–00–45	.SHIM, DRIVE PISTON (0.45T)	1					UR
	2HR–46127–00–50	.SHIM, DRIVE PISTON (0.50T)	1					UR
15	3B4–46316–00	.GEAR, PINION 1	1					
16	93306–205U0	.BEARING	1					
17	3B4–46119–00	.SHIM, THRUST (0.25T)	2					UR
	3B4–46119–10	.SHIM, THRUST (0.30T)	2					UR
	3B4–46119–20	.SHIM, THRUST (0.35T)	2					UR
	3B4–46119–30	.SHIM, THRUST (0.40T)	2					UR
	3B4–46119–40	.SHIM, THRUST (0.45T)	2					UR
	3B4–46119–50	.SHIM, THRUST (0.50T)	2					UR

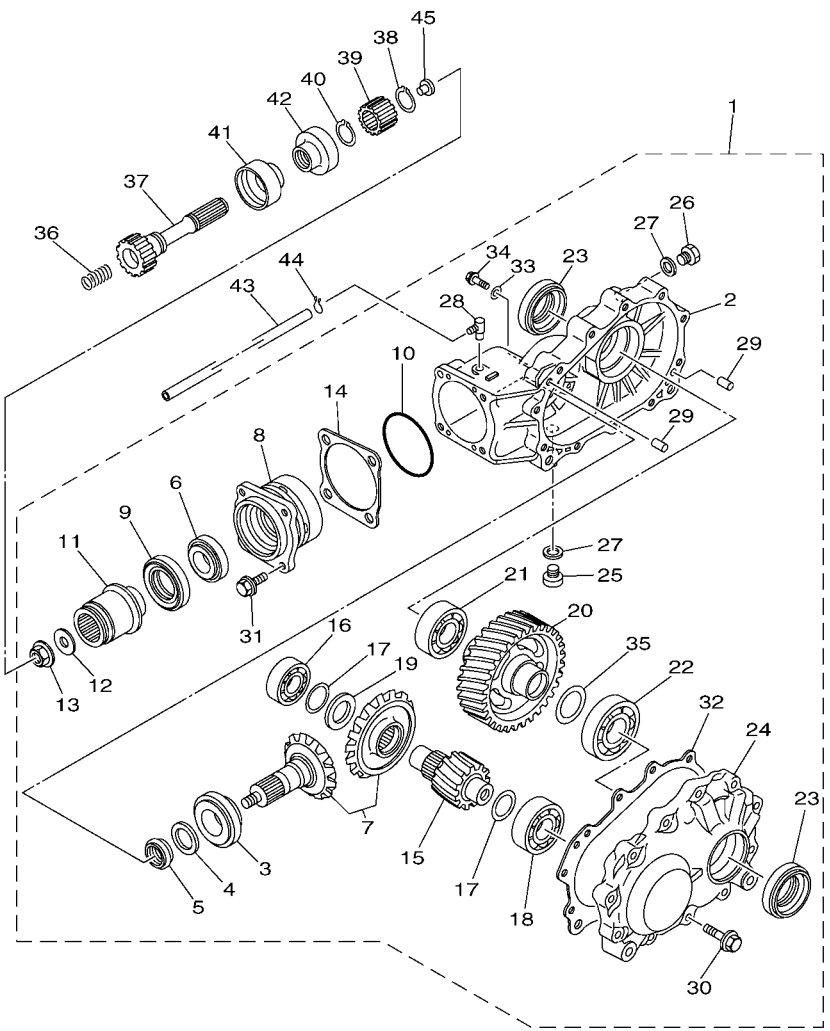

FIG. 26 DRIVE SHAFT

REF. NO.	PART NO.	DESCRIPTION	USA					REMARKS
18	93306–30534	.BEARING	1					
19	3B4–4621F–00	.SHIM,THRUST (4.5T)	1					UR
	3B4–4621F–10	.SHIM,THRUST (4.8T)	1					UR
	3B4–4621F–20	.SHIM,THRUST (5.1T)	1					UR
	3B4–4621F–30	.SHIM,THRUST (5.4T)	1					UR
20	3B4–46326–00	.GEAR, WHEEL 1	1					
21	93306–00704	.BEARING	1					
22	93306–207U0	.BEARING	1					
23	93102–35380	.OIL SEAL	2					
24	3B4–46152–00	.HOUSING, BEARING	1					
25	90340–14002	.PLUG, STRAIGHT SCREW	1					
26	90340–14029	.PLUG, STRAIGHT SCREW	1					
27	214–11198–01	.GASKET	2					
28	5UG–15371–00	.BREATHER	1					
29	99530–10014	.PIN, DOWEL	2					
30	95822–08035	.BOLT, FLANGE	11					
31	95822–08025	.BOLT, FLANGE	4					
32	3B4–4631A–01	.GSKT., CASE	1					
33	90201–08087	.WASHER, PLATE	1					
34	95022–08012	.BOLT, FLANGE	1					
35	3B4–46344–00	.SHIM (0.25T)	1					UR
	3B4–46344–10	.SHIM (0.30T)	1					UR
	3B4–46344–20	.SHIM (0.35T)	1					UR
	3B4–46344–30	.SHIM (0.40T)	1					UR
	3B4–46344–40	.SHIM (0.45T)	1					UR
	3B4–46344–50	.SHIM (0.50T)	1					UR
36	90501–20361	SPRING, COMPRESSION	1					

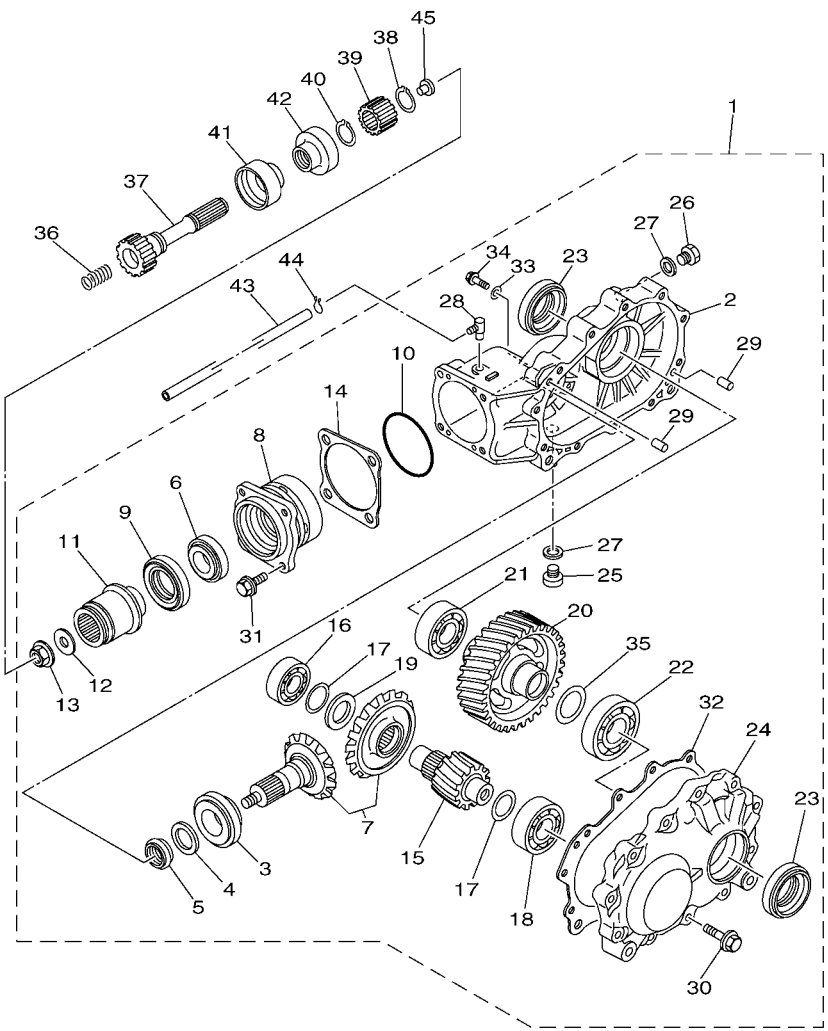

1HP1110-L260

FIG. 26 DRIVE SHAFT

REF. NO.	PART NO.	DESCRIPTION	USA					REMARKS
37	1HP–G6172–00	SHAFT, DRIVE	1					
38	99009–19400	CIRCLIP	1					
39	5KM–46126–00	COUPLING	1					
40	93410–22039	CIRCLIP	1					
41	5KM–46137–00	SEAL 2	1					
42	5KM–46136–00	SEAL 1	1					
43	90445–074F6	HOSE (L1300)	1					
44	90467–07029	CLIP	1					
45	5KM–46559–00	DAMPER	1					

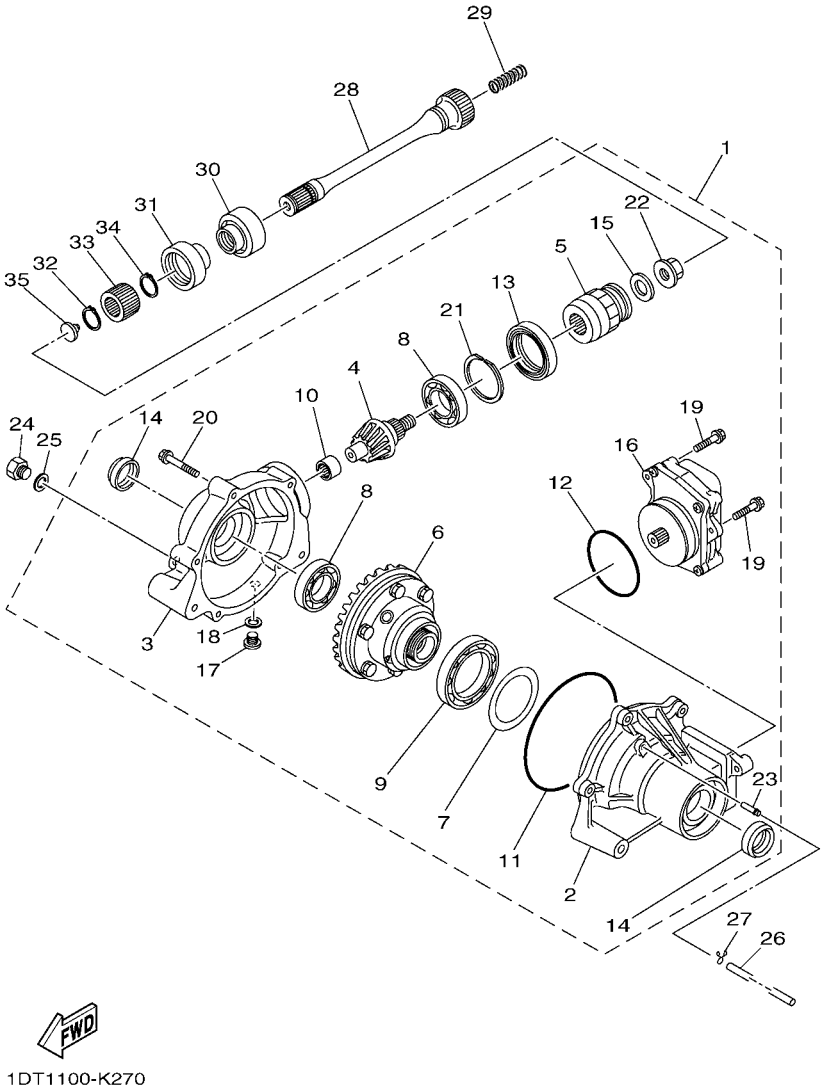

FIG. 27 FRONT DIFFERENTIAL

REF. NO.	PART NO.	DESCRIPTION	USA					REMARKS
1	1HP–46160–00	FRONT AXLE GEAR CASE COMP.	1					
2	3B4–46162–01	.HOUSING, BEARING 2	1					
3	3B4–46161–00	.HOUSING, SHAFT DRIVE 2	1					
4	3B4–46141–00	.PINION, DRIVE 2	1					
5	3B4–67839–10	.CUPLING	1					
6	3B4–46470–02	.LIMITED SLIP DIFF. ASSY	1					
7	3B4–46117–00	.SHIM, RING GEAR (0.1T)	1					UR
	3B4–46117–10	.SHIM, RING GEAR (0.2T)	1					UR
	3B4–46117–20	.SHIM, RING GEAR (0.3T)	1					UR
	3B4–46117–30	.SHIM, RING GEAR (0.4T)	1					UR
8	93306–00613	.BEARING	2					
9	3B4–46164–00	.BEARING 1	1					
10	3B4–46166–00	.BEARING 3	1					
11	3B4–46134–00	.O-RING 1	1					
12	3B4–46135–00	.O-RING 2	1					
13	93105–46001	.OIL SEAL	1					
14	3B4–46163–00	.SEAL, OIL 1	2					
15	3B4–47359–00	.WASHER	1					
16	1HP–4616A–00	.SERVO MOTOR COMP	1					
17	90340–10001	.PLUG, STRAIGHT SCREW	1					
18	90430–10003	.GASKET	1					
19	95812–06014	.BOLT, FLANGE	3					
20	95812–08040	.BOLT, FLANGE	5					
21	3B4–46142–00	.RING,HOLE SNAP 1	1					
22	4WV–46145–10	.NUT 1	1					
23	5GH–46293–00	.TUBE	1					
24	90340–14029	PLUG, STRAIGHT SCREW	1					

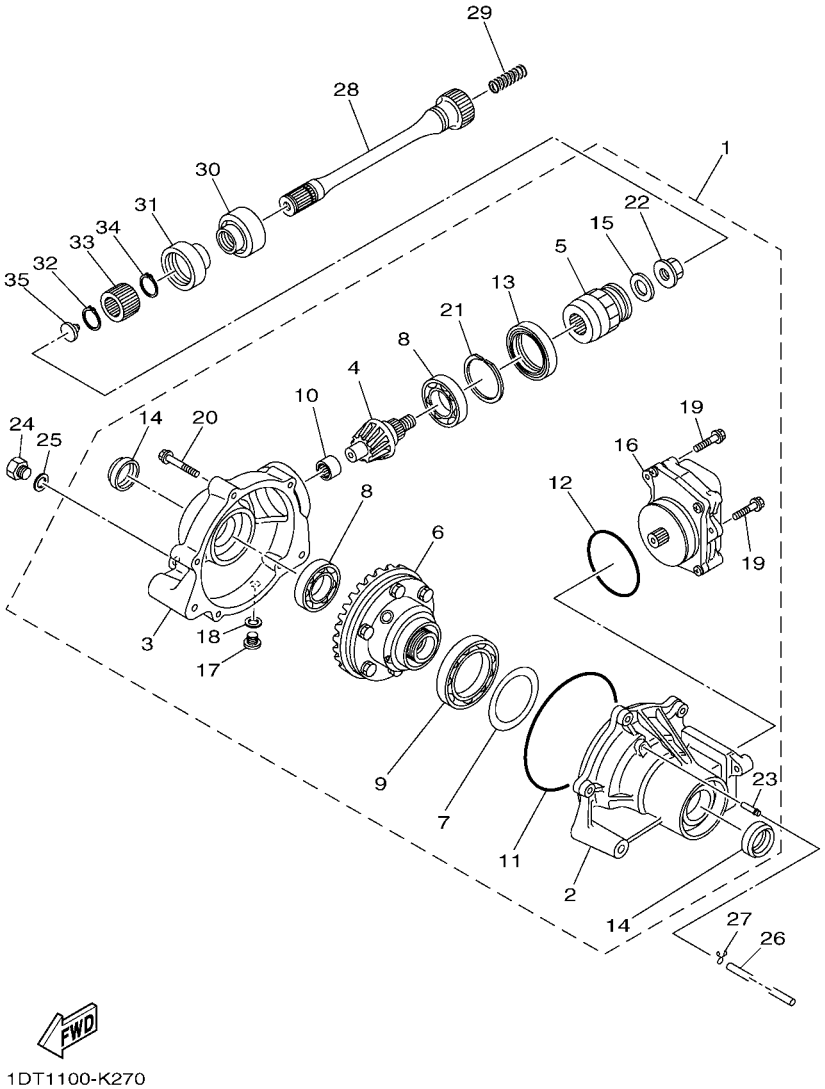

FIG. 27 FRONT DIFFERENTIAL

REF. NO.	PART NO.	DESCRIPTION	USA					REMARKS
25	214–11198–01	GASKET	1					
26	90445–070F1	HOSE (L950)	1					
27	90467–07029	CLIP	1					
28	1HP–G6173–00	SHAFT, DRIVE 2	1					
29	90501–20361	SPRING, COMPRESSION	1					
30	5KM–46137–00	SEAL 2	1					
31	5KM–46136–00	SEAL 1	1					
32	99009–19400	CIRCLIP	1					
33	5KM–46126–00	COUPLING	1					
34	93410–22039	CIRCLIP	1					
35	5KM–46559–00	DAMPER	1					

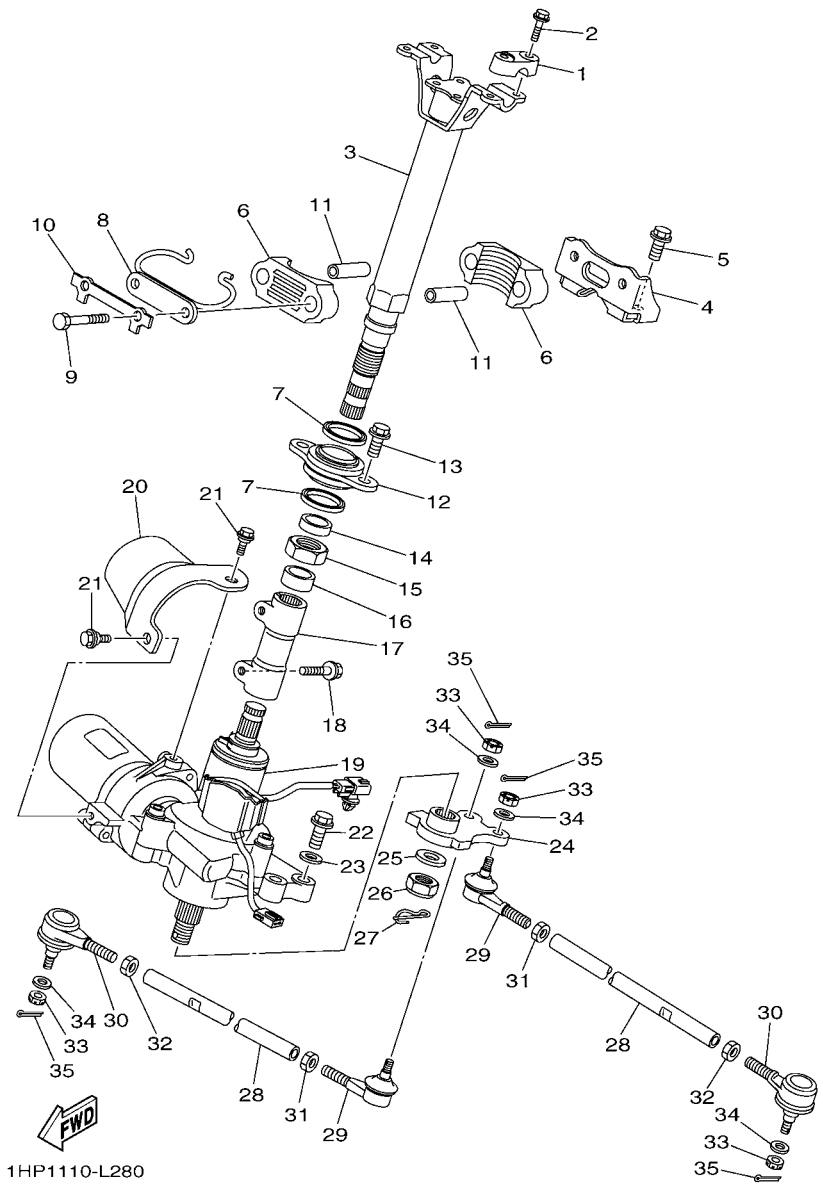

FIG. 28 STEERING

REF. NO.	PART NO.	DESCRIPTION	USA					REMARKS
1	8K1–23814–00	HOLDER, HANDLE	2					
2	95812–08030	BOLT, FLANGE	4					
3	1HP–F3813–00	COLUMN, STEERING 2	1					
4	1HP–F2517–00	SUPT., STRG. COLUMN	1					
5	90105–10204	BOLT, FLANGE	2					
6	37S–F3812–00	BEARING, STEERING	2					
7	93112–31800	OIL SEAL	2					
8	1HP–F3868–00	BRACKET, STEERING LOWER	1					
9	97022–08060	BOLT	2					
10	1UY–23894–01	WASHER, LOCK 1	1					
11	90387–090R0	COLLAR	2					
12	3B4–23875–10	BEARING, STEERING LOWER	1					
13	90105–10204	BOLT, FLANGE	2					
14	90387–22014	COLLAR	1					
15	90185–22008	NUT, SELF-LOCKING	1					
16	90387–22591	COLLAR	1					
17	3B4–2381B–01	JOINT	1					
18	90119–08106	BOLT, WITH WASHER	2					
19	3B4–238B0–30	POWER STRG. ACTUATOR ASSY	1					
20	1HP–F38B6–00	COVER, MOTOR	1					
21	90109–06172	BOLT	2					
22	90105–08153	BOLT, FLANGE	4					
23	90201–08048	WASHER, PLATE	4					
24	1HP–F3816–00	ARM, PITMAN	1					
25	90201–16021	WASHER, PLATE	1					
26	95612–16100	NUT, U	1					
27	91402–20025	PIN, COTTER	1					

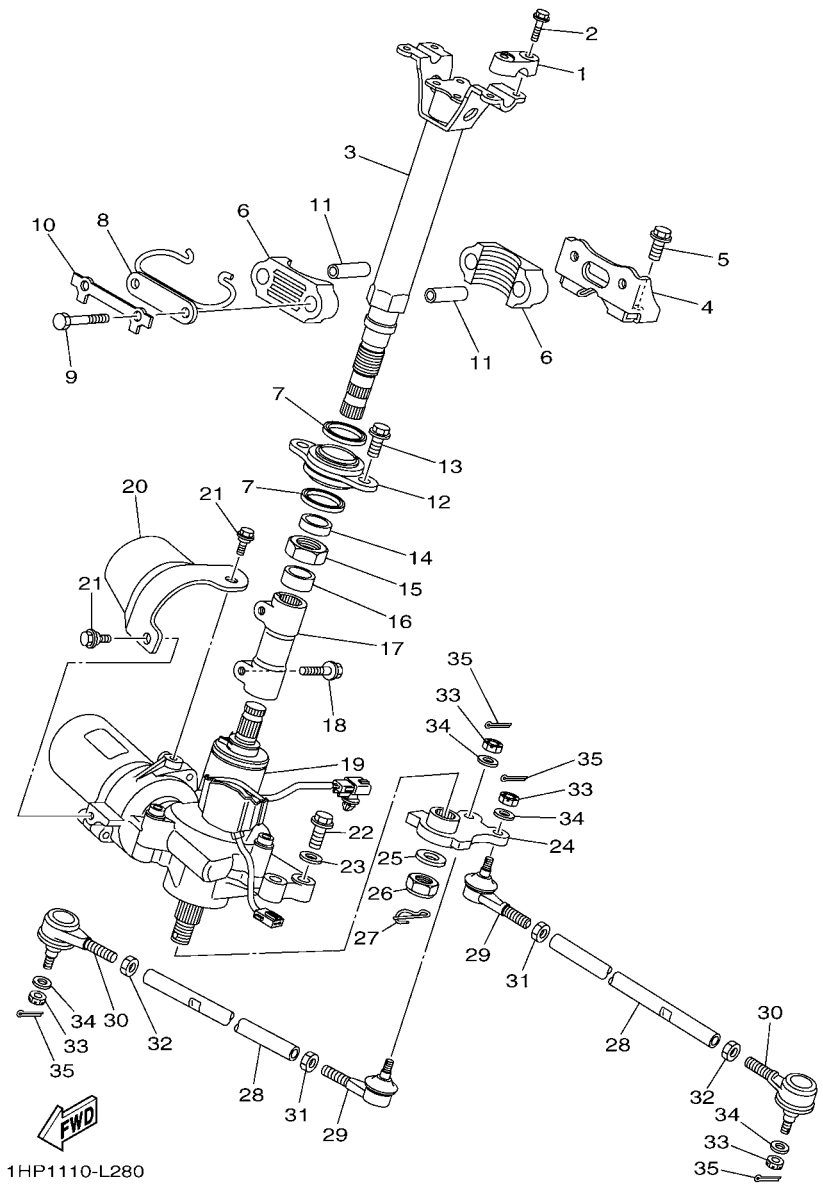

FIG. 28 STEERING

REF. NO.	PART NO.	DESCRIPTION	USA					REMARKS
28	5KM–23831–00	ROD, TIE	2					
29	1UY–23841–01	JOINT, UNIVERSAL 1	2					
30	1UY–23845–01	JOINT, UNIVERSAL 2	2					
31	95302–10700	NUT	2					
32	90170–10010	NUT	2					(L.H. THREAD)
33	90171–10001	NUT, CASTLE	4					
34	90209–10229	WASHER	4					
35	91401–20020	PIN, COTTER	4					

FIG. 29 FRONT SUSPENSION & WHEEL

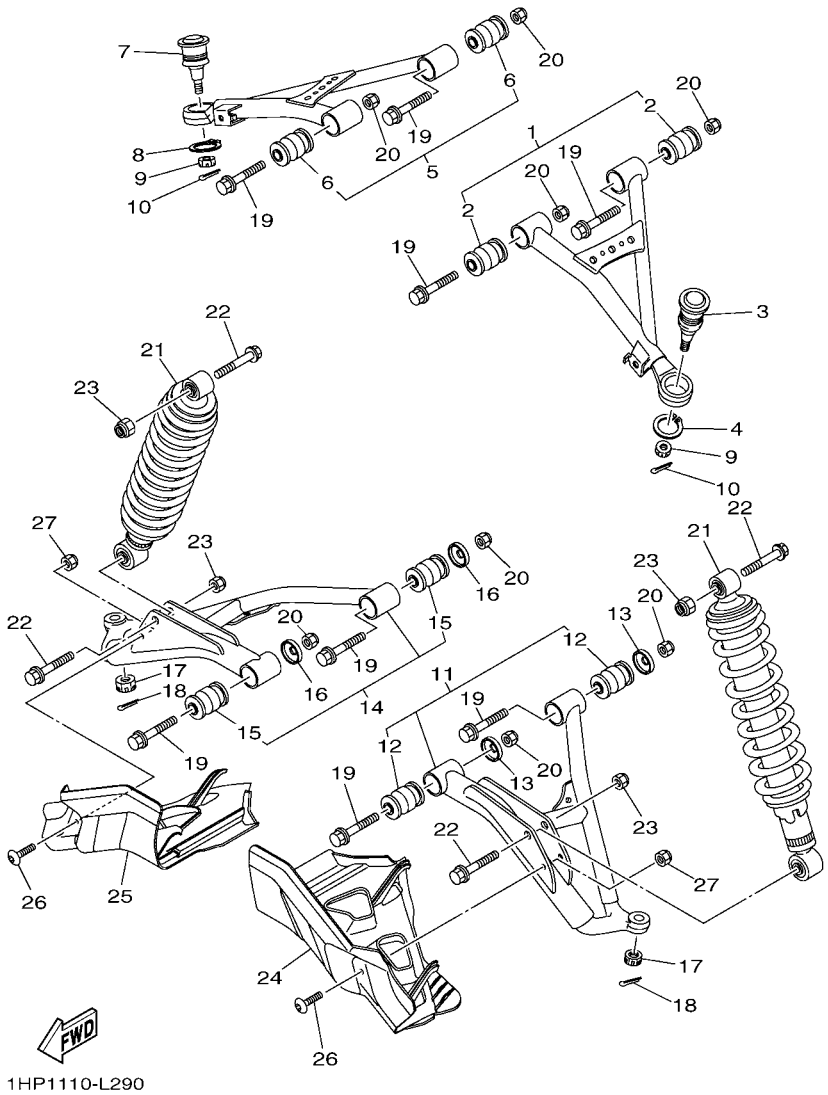

REF. NO.	PART NO.	DESCRIPTION	USA					REMARKS
1	1HP–F3540–00	FRONT UPPER ARM COMP. (LEFT)	1					
2	1HP–F3526–00	.BUSH	2					
3	5LP–23579–00	BALL JOINT 2	1					
4	99009–30400	CIRCLIP	1					
5	1HP–F3550–00	FRONT UPPER ARM COMP. (RIGHT)	1					
6	1HP–F3526–00	.BUSH	2					
7	5LP–23579–00	BALL JOINT 2	1					
8	99009–30400	CIRCLIP	1					
9	90171–10001	NUT, CASTLE	2					
10	91401–20020	PIN, COTTER	2					
11	1HP–F3570–00	FRONT LOWER ARM COMP. (LEFT)	1					
12	1HP–F3526–00	.BUSH	2					
13	5KM–22149–10	WASHER	2					
14	1HP–F3580–00	FRONT LOWER ARM COMP. (RIGHT)	1					
15	1HP–F3526–00	.BUSH	2					
16	5KM–22149–10	WASHER	2					
17	90171–12001	NUT, CASTLE	2					
18	91490–25020	PIN. COTTER	2					
19	90105–10222	BOLT, FLANGE	8					
20	90185–10012	NUT, SELF-LOCKING	8					
21	1HP–F3350–00	SHOCK ABSORBER ASSY	2					
22	90105–10131	BOLT, FLANGE	4					
23	90185–10012	NUT, SELF-LOCKING	4					
24	1HP–F3123–00	COVER, UNDER 1	1					
25	1HP–F3133–00	COVER, LOWER 2	1					
26	90111–06814	BOLT,HEX. SOCKET BUTTON	2					
27	95702–06300	NUT, NYLON	2					

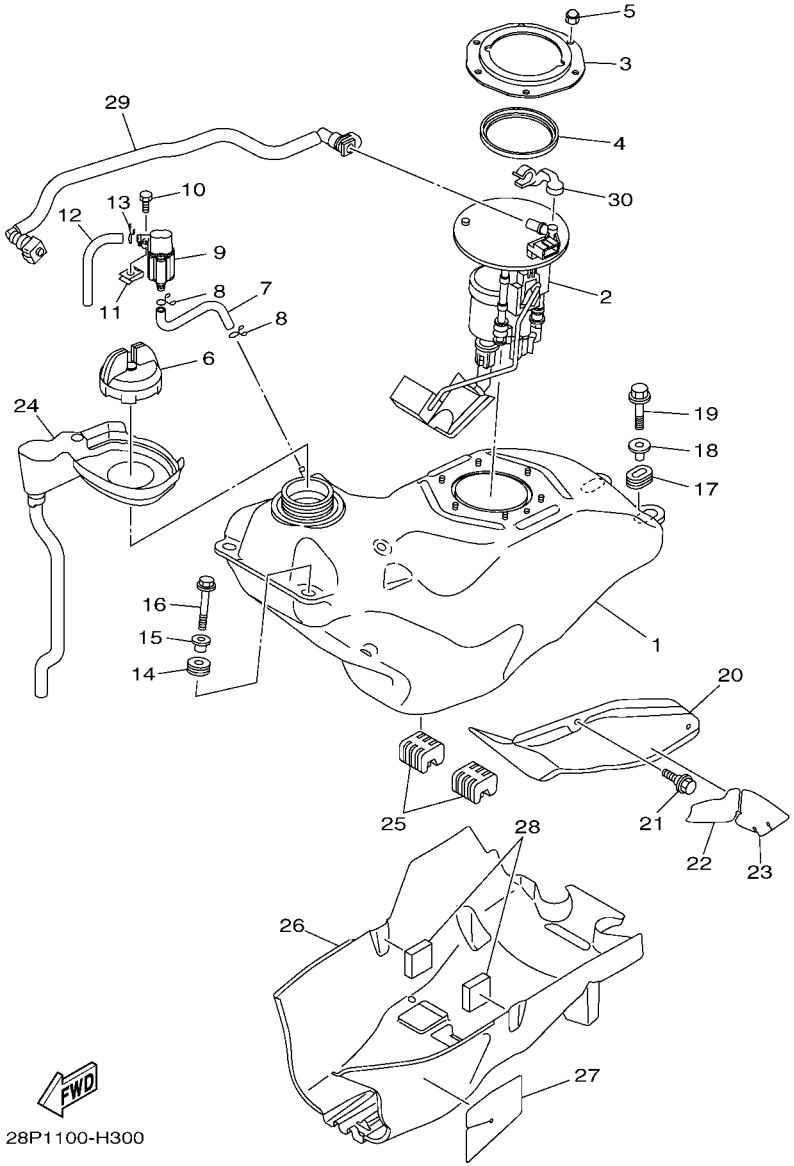

FIG. 30 FUEL TANK

REF. NO.	PART NO.	DESCRIPTION	USA					REMARKS
1	1HP–F4110–00	FUEL TANK COMP.	1					
2	3B4–13907–10	FUEL PUMP COMP.	1					
3	3B4–24491–00	BRACKET, FUEL PUMP	1					
4	1S3–24486–00	O-RING	1					
5	95302–06800	NUT, CROWN	6					
6	3B4–24610–10	CAP ASSY	1					
7	1HP–F4312–00	PIPE 2	1					
8	90467–09006	CLIP	2					
9	28P–24380–00	PIPE JOINT ASSY	1					
10	97002–06016	BOLT	1					
11	90183–06053	NUT, SPRING	1					
12	90445–09825	HOSE (L110)	1					
13	90467–09006	CLIP	1					
14	90480–18290	GROMMET	2					
15	90387–066J1	COLLAR	2					
16	95802–06030	BOLT, FLANGE	2					
17	90480–01400	GROMMET	2					
18	90387–07021	COLLAR	2					
19	95802–06030	BOLT, FLANGE	2					
20	1HP–F4129–00	COVER, SIDE 1	1					
21	90109–06172	BOLT	2					
22	1HP–F414J–00	DAMPER, PLATE 2	1					
23	1HP–F414K–00	DAMPER, PLATE 3	1					
24	3B4–2414F–00	COVER, FILLER COMP.	1					
25	1HP–F4181–00	DAMPER, LOCATING 1	2					
26	1HP–F4141–00	PROTECTOR, FUEL TANK	1					
27	1HP–F416G–00	INSULATOR, FUEL TANK 2	1					

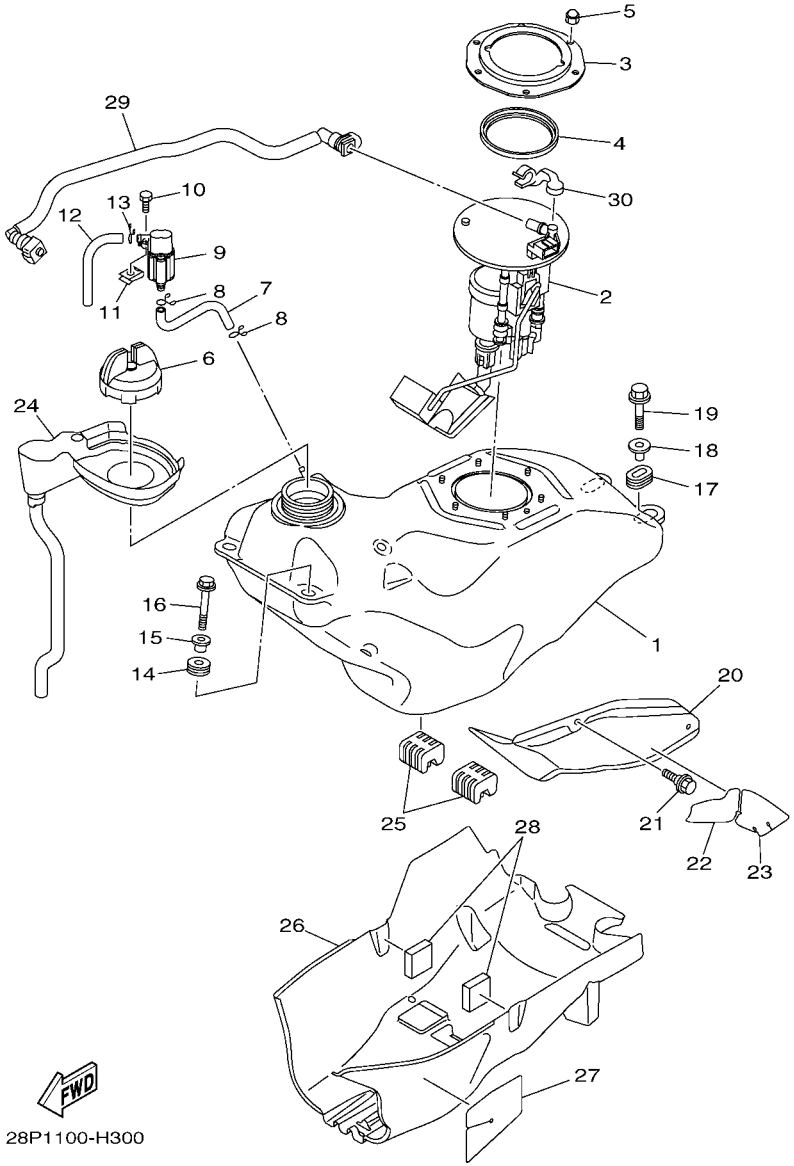

FIG. 30 FUEL TANK

REF. NO.	PART NO.	DESCRIPTION	USA					REMARKS
28	3B4–24182–00	DAMPER, LOCATING 2	2					
29	3B4–13971–10	PIPE, FUEL 1	1					
30	90464–14004	CLAMP	1					

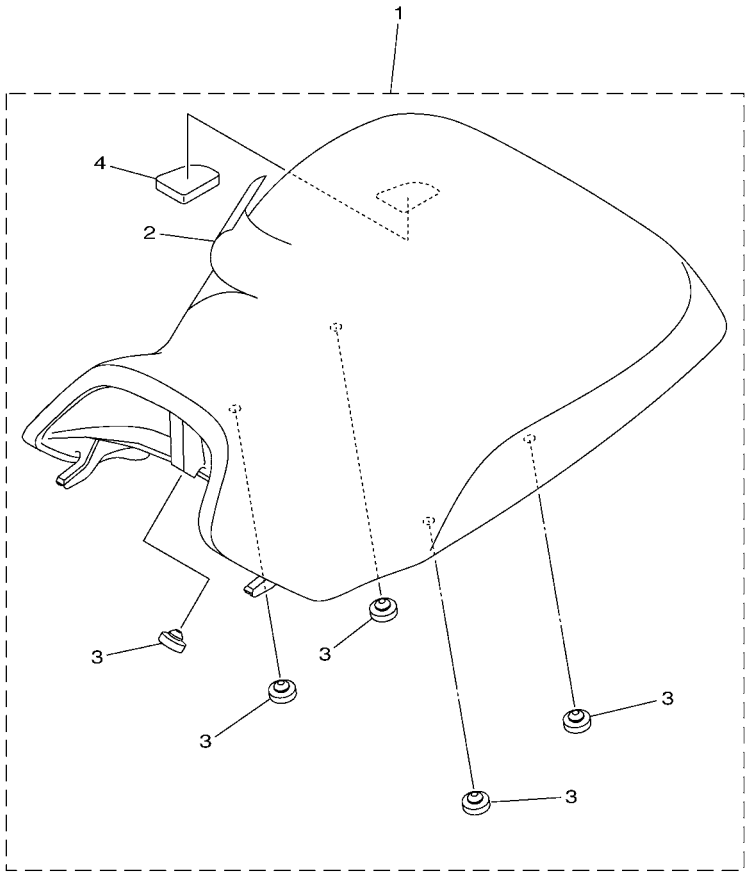

1HP1110-L310

FIG. 31 SEAT

REF. NO.	PART NO.	DESCRIPTION	USA					REMARKS
1	1HP–F4710–00	SINGLE SEAT ASSY	1					
2	1HP–F470F–00	.SEAT COVER COMP.	1					
3	4XE–F4747–00	.DAMPER, SEAT	5					
4	1HP–F4725–00	.SPACER 1	1					

FIG. 32 FRONT WHEEL

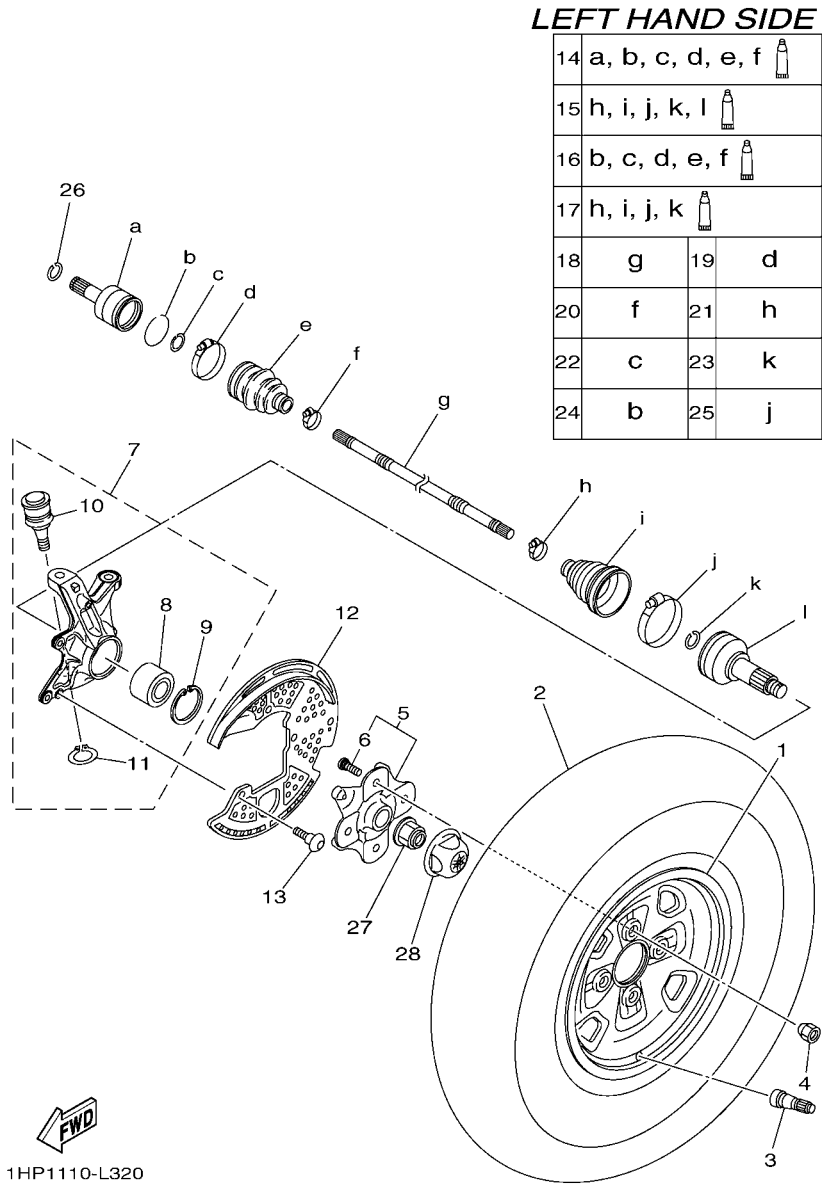

REF. NO.	PART NO.	DESCRIPTION	USA					REMARKS
1	1HP–F5180–10	WHEEL COMP.	1					
2	94108–12817	TIRE(AT25X8-12 MU19**TL)	1					MAXXIS
3	93900–00813	VALVE, RIM (TR413)	1					MAXXIS
4	90179–10020	NUT	4					
5	3B4–25111–10	HUB, FRONT	1					
6	90114–10014	.BOLT, SERRATION	4					
7	1HP–F3501–00	STEERING KNUCKLE ASSY (LEFT)	1					
8	93305–00602	.BEARING	1					
9	99009–55500	.CIRCLIP	1					
10	3B4–23579–01	.BALL JOINT 2	1					
11	99009–30400	.CIRCLIP	1					
12	3B4–2514A–00	RING, WHEEL 1	1					
13	90149–06117	SCREW	3					
14	28P–2510J–01	DOUBLE OFF SET JOINT	1					
15	28P–2510F–01	BALL JOINT SET	1					
16	28P–2510H–01	BOOT SET(DOUBLE OFFSET JOINT)	1					
17	28P–2510G–00	BOOT SET (BALL JOINT)	1					
18	28P–2518E–00	SHAFT	1					
19	3B4–2511H–00	BOOT BAND(DOUBLE OFFSET JOINT)	1					
20	3B4–2512G–00	BOOT BAND (SMALL)	1					
21	28P–2512G–00	BOOT BAND (SMALL)	1					
22	3B4–2512J–00	SNAP RING	1					
23	3B4–2512H–00	CIRCLIP	1					
24	3B4–25182–00	CIRCLIP	1					
25	28P–2511H–00	BOOT BAND(DOUBLE OFFSET JOINT)	1					
26	93450–22119	CIRCLIP	1					
27	90179–20016	NUT	1					

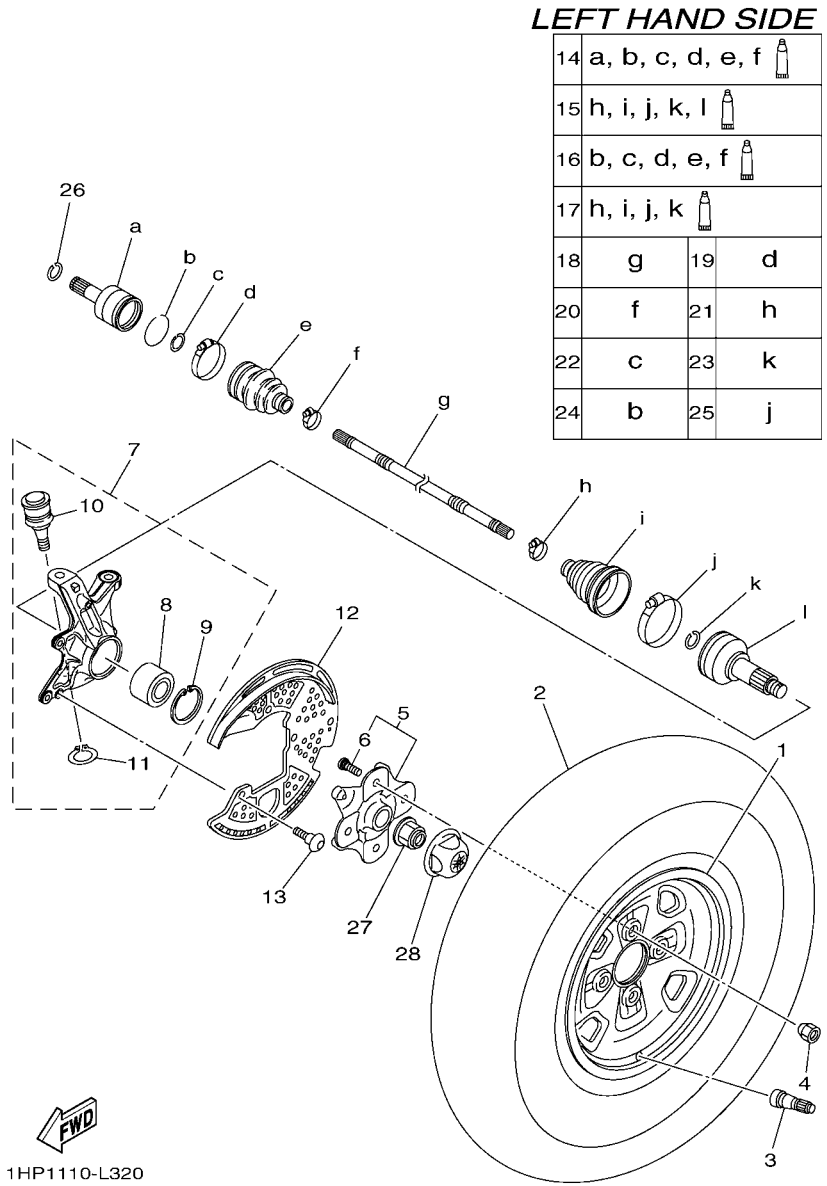

FIG. 32 FRONT WHEEL

REF. NO.	PART NO.	DESCRIPTION	USA					REMARKS
28	1HP–F512A–00	CAP, WHEEL	1					

FIG. 33 FRONT WHEEL 2

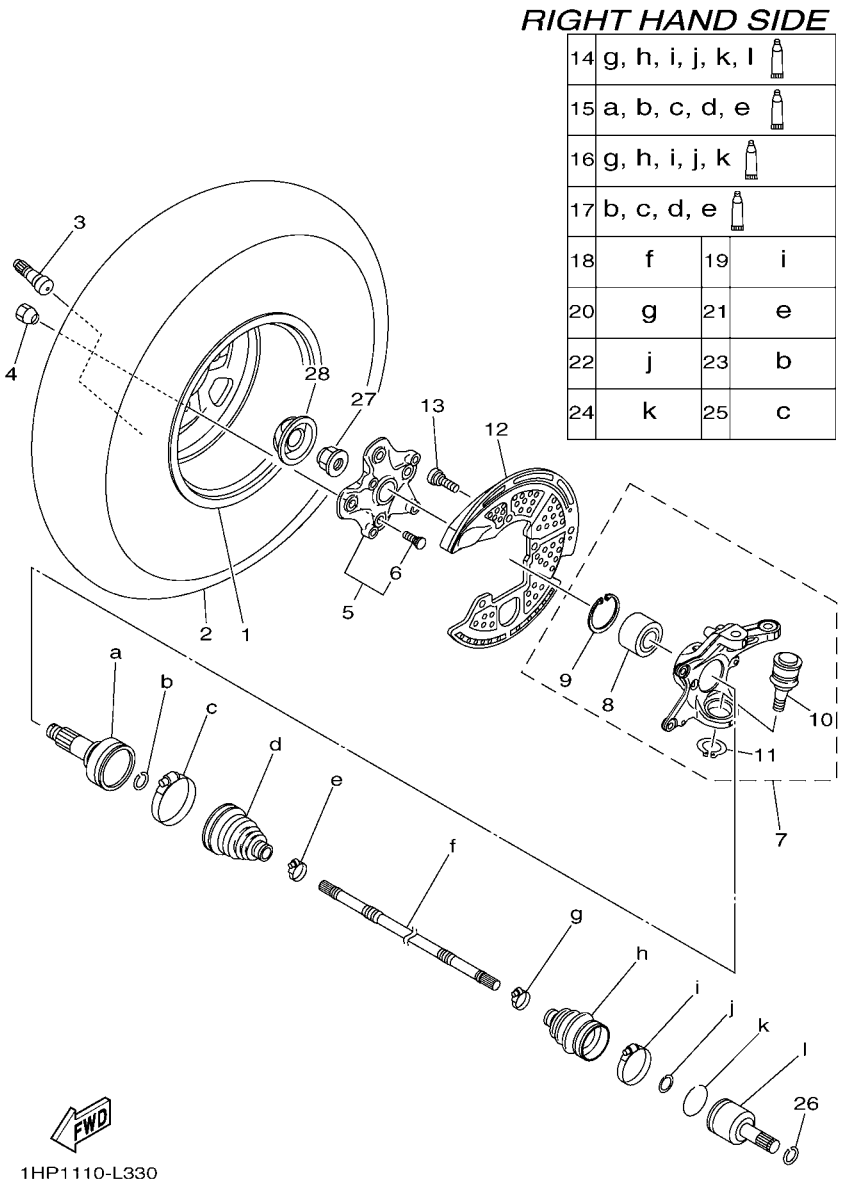

REF. NO.	PART NO.	DESCRIPTION	USA					REMARKS
1	1HP–F5180–10	WHEEL COMP.	1					
2	94108–12817	TIRE(AT25X8-12 MU19**TL)	1					MAXXIS
3	93900–00813	VALVE, RIM (TR413)	1					MAXXIS
4	90179–10020	NUT	4					
5	3B4–25111–10	HUB, FRONT	1					
6	90114–10014	.BOLT, SERRATION	4					
7	1HP–F3502–00	STEERING KNUCKLE ASSY (RIGHT)	1					
8	93305–00602	.BEARING	1					
9	99009–55500	.CIRCLIP	1					
10	3B4–23579–01	.BALL JOINT 2	1					
11	99009–30400	.CIRCLIP	1					
12	3B4–2515A–00	RING, WHEEL 2	1					
13	90149–06117	SCREW	3					
14	28P–2510J–01	DOUBLE OFF SET JOINT	1					
15	28P–2510F–01	BALL JOINT SET	1					
16	28P–2510H–01	BOOT SET(DOUBLE OFFSET JOINT)	1					
17	28P–2510G–00	BOOT SET (BALL JOINT)	1					
18	28P–2518E–00	SHAFT	1					
19	3B4–2511H–00	BOOT BAND(DOUBLE OFFSET JOINT)	1					
20	3B4–2512G–00	BOOT BAND (SMALL)	1					
21	28P–2512G–00	BOOT BAND (SMALL)	1					
22	3B4–2512J–00	SNAP RING	1					
23	3B4–2512H–00	CIRCLIP	1					
24	3B4–25182–00	CIRCLIP	1					
25	28P–2511H–00	BOOT BAND(DOUBLE OFFSET JOINT)	1					
26	93450–22119	CIRCLIP	1					
27	90179–20016	NUT	1					

FIG. 33 FRONT WHEEL 2

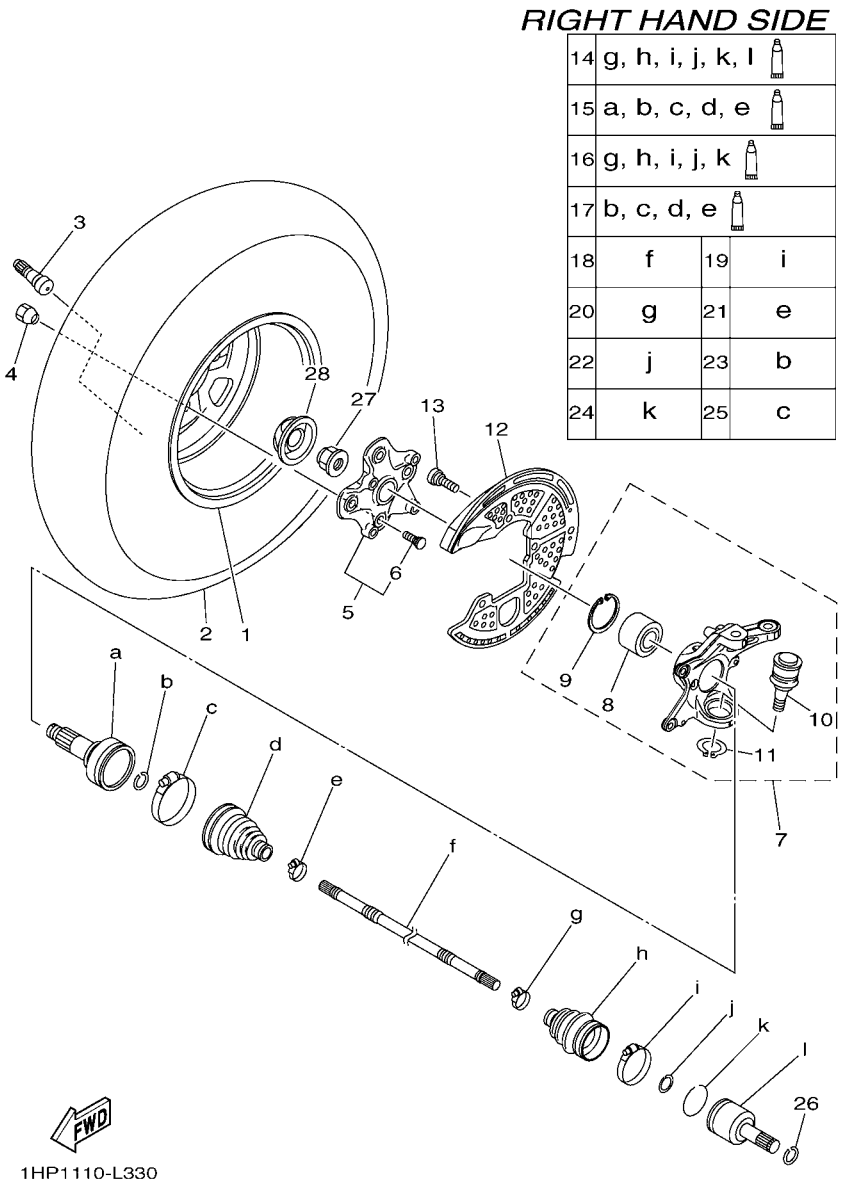

REF. NO.	PART NO.	DESCRIPTION	USA					REMARKS
28	1HP–F512A–00	CAP, WHEEL	1					

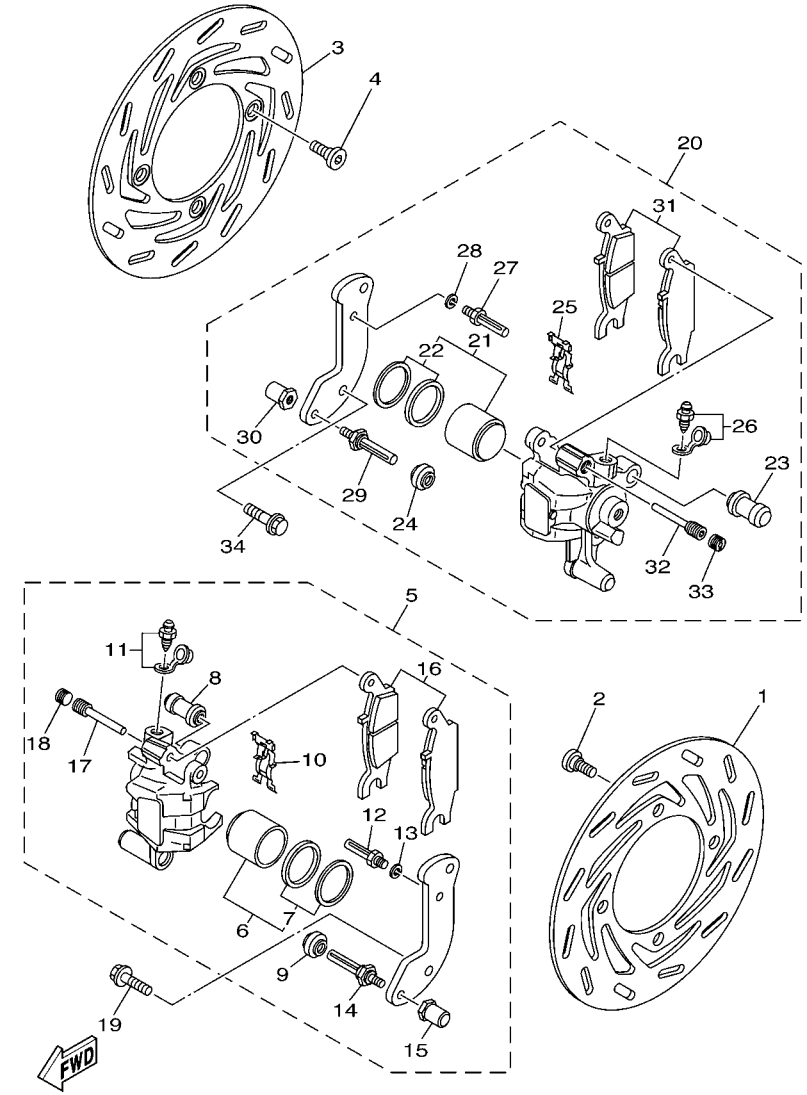

FIG. 34 FRONT BRAKE CALIPER

REF. NO.	PART NO.	DESCRIPTION	USA					REMARKS
1	1HP–F582T–00	DISC, BRAKE (LEFT)	1					
2	90109–08101	BOLT	4					
3	1HP–F582T–00	DISC, BRAKE (LEFT)	1					
4	90109–08101	BOLT	4					
5	3B4–2580T–02	CALIPER ASSY (LEFT)	1					
6	3B4–W0057–00	.PISTON ASSY, CALIPER	1					
7	3B4–W0047–00	..CALIPER SEAL KIT	1					
8	1UY–25937–51	.BOOT 2	1					
9	3JD–25917–00	.BOOT, CALIPER	1					
10	5DH–25919–00	.SUPPORT, PAD	1					
11	1UY–W0048–50	.BLEED SCREW KIT	1					
12	1UY–25926–51	.BOLT	1					
13	1UY–25938–51	.WASHER, SPRING	1					
14	3JD–25926–00	.BOLT	1					
15	3JD–25961–00	.NUT	1					
16	3B4–W0045–00	.BRAKE PAD KIT	1					
17	5DH–25933–00	.PIN, PAD	1					
18	5DH–25916–00	.PLUG	1					
19	90105–08161	BOLT, FLANGE	2					
20	3B4–2580U–02	CALIPER ASSY (RIGHT)	1					
21	3B4–W0057–00	.PISTON ASSY, CALIPER	1					
22	3B4–W0047–00	..CALIPER SEAL KIT	1					
23	1UY–25937–51	.BOOT 2	1					
24	3JD–25917–00	.BOOT, CALIPER	1					
25	5DH–25919–00	.SUPPORT, PAD	1					
26	1UY–W0048–50	.BLEED SCREW KIT	1					
27	1UY–25926–51	.BOLT	1					

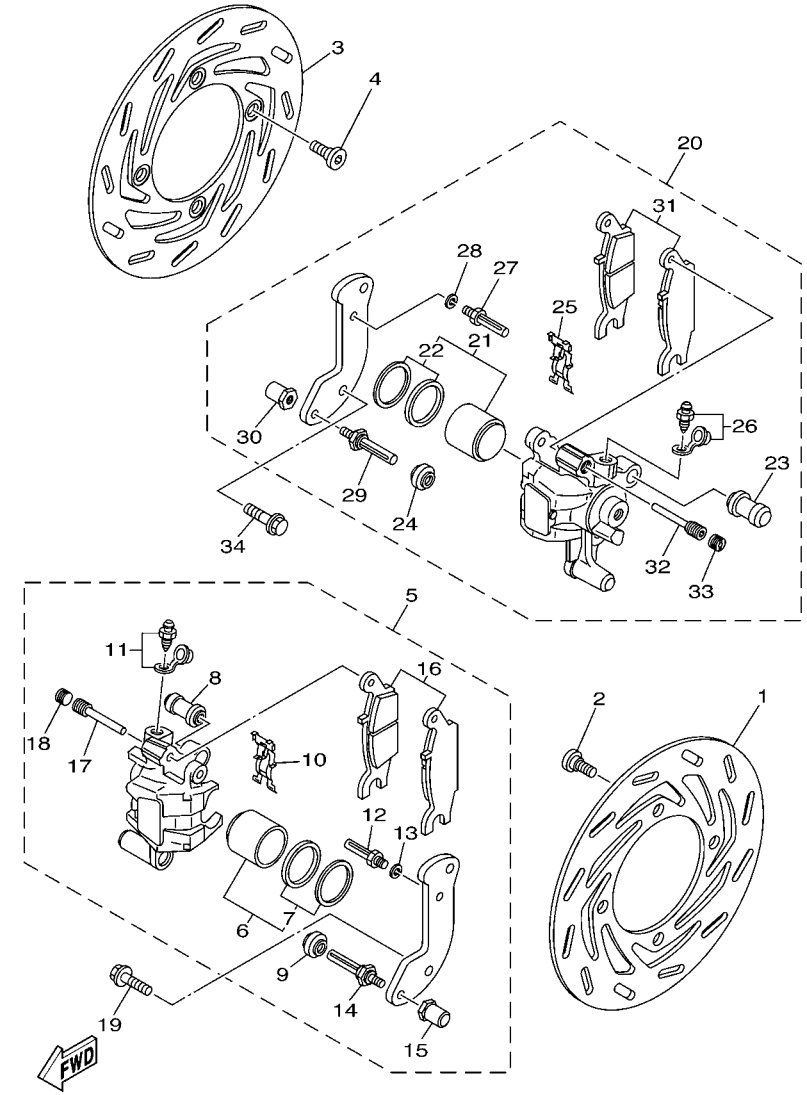

FIG. 34 FRONT BRAKE CALIPER

REF. NO.	PART NO.	DESCRIPTION	USA					REMARKS
28	1UY–25938–51	.WASHER, SPRING	1					
29	3JD–25926–00	.BOLT	1					
30	3JD–25961–00	.NUT	1					
31	3B4–W0045–10	.BRAKE PAD KIT	1					
32	5DH–25933–00	.PIN, PAD	1					
33	5DH–25916–00	.PLUG	1					
34	90105–08161	BOLT, FLANGE	2					

FIG. 35 REAR WHEEL

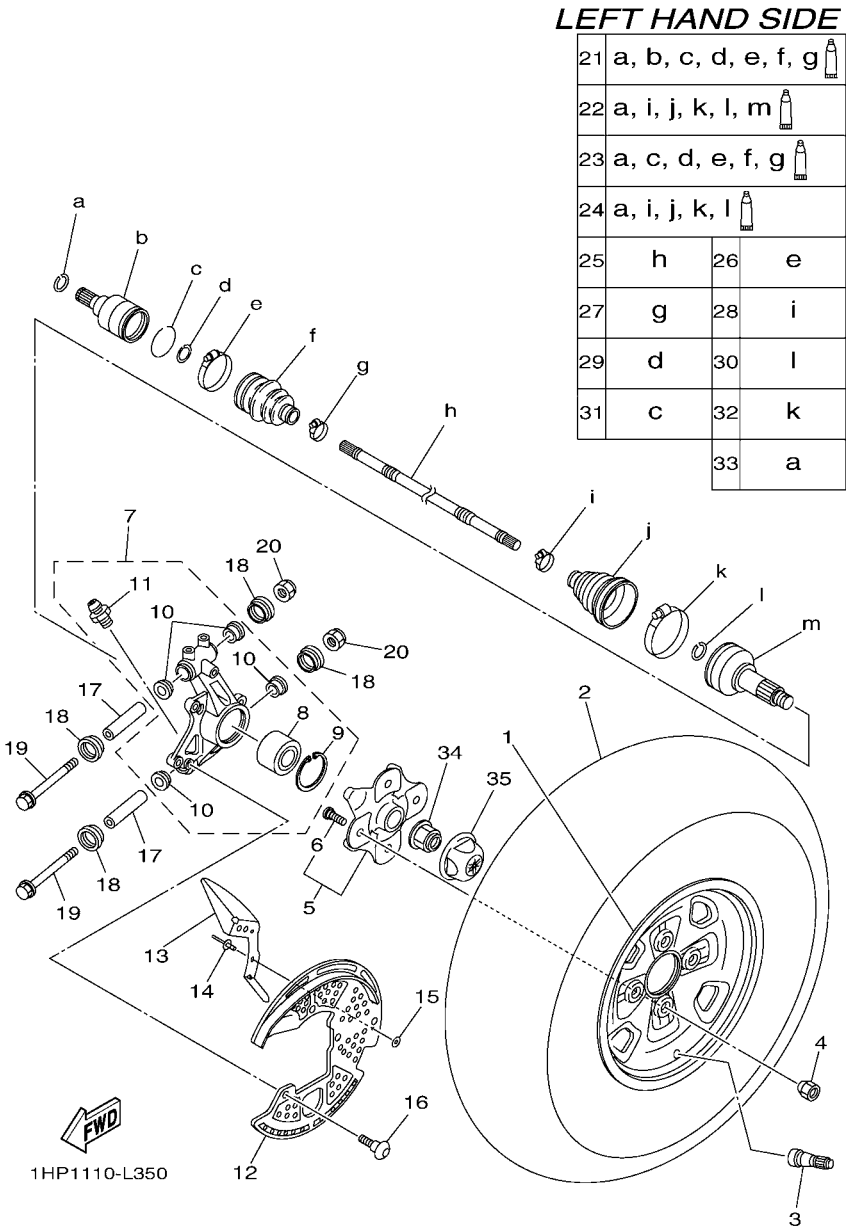

REF. NO.	PART NO.	DESCRIPTION	USA					REMARKS
1	1HP–F5390–10	REAR WHEEL COMP.	1					
2	94110–12814	TIRE(AT25X10-12 MU20**TL)	1					MAXXIS
3	93900–00813	VALVE, RIM (TR413)	1					MAXXIS
4	90179–10020	NUT	4					
5	3B4–25111–10	HUB, FRONT	1					
6	90114–10014	.BOLT, SERRATION	4					
7	1HP–F530F–00	REAR KNUCKLE ASSY	1					
8	93305–00602	.BEARING	1					
9	99009–55500	.CIRCLIP	1					
10	90381–17067	.BUSH, SOLID	4					
11	93700–06004	.NIPPLE, GREASE	2					
12	3B4–2514A–00	RING, WHEEL 1	1					
13	3B4–2539F–00	PLATE 1	1					
14	90267–47187	RIVET, BLIND (4.7X16.4 BLACK)	2					
15	90201–04027	WASHER, PLATE	2					
16	90149–06117	SCREW	3					
17	5KM–23448–00	SPACER	2					
18	2NL–23517–00	COVER, THRUST 1	4					
19	90105–10212	BOLT, FLANGE	2					
20	90185–10012	NUT, SELF-LOCKING	2					
21	28P–2530V–01	DOUBLE OFF SET JOINT	1					
22	28P–2510F–02	BALL JOINT SET	1					
23	28P–2510H–02	BOOT SET(DOUBLE OFFSET JOINT)	1					
24	28P–2510G–01	BOOT SET (BALL JOINT)	1					
25	28P–2518E–10	SHAFT	1					
26	3B4–2511H–00	BOOT BAND(DOUBLE OFFSET JOINT)	1					
27	3B4–2512G–00	BOOT BAND (SMALL)	1					

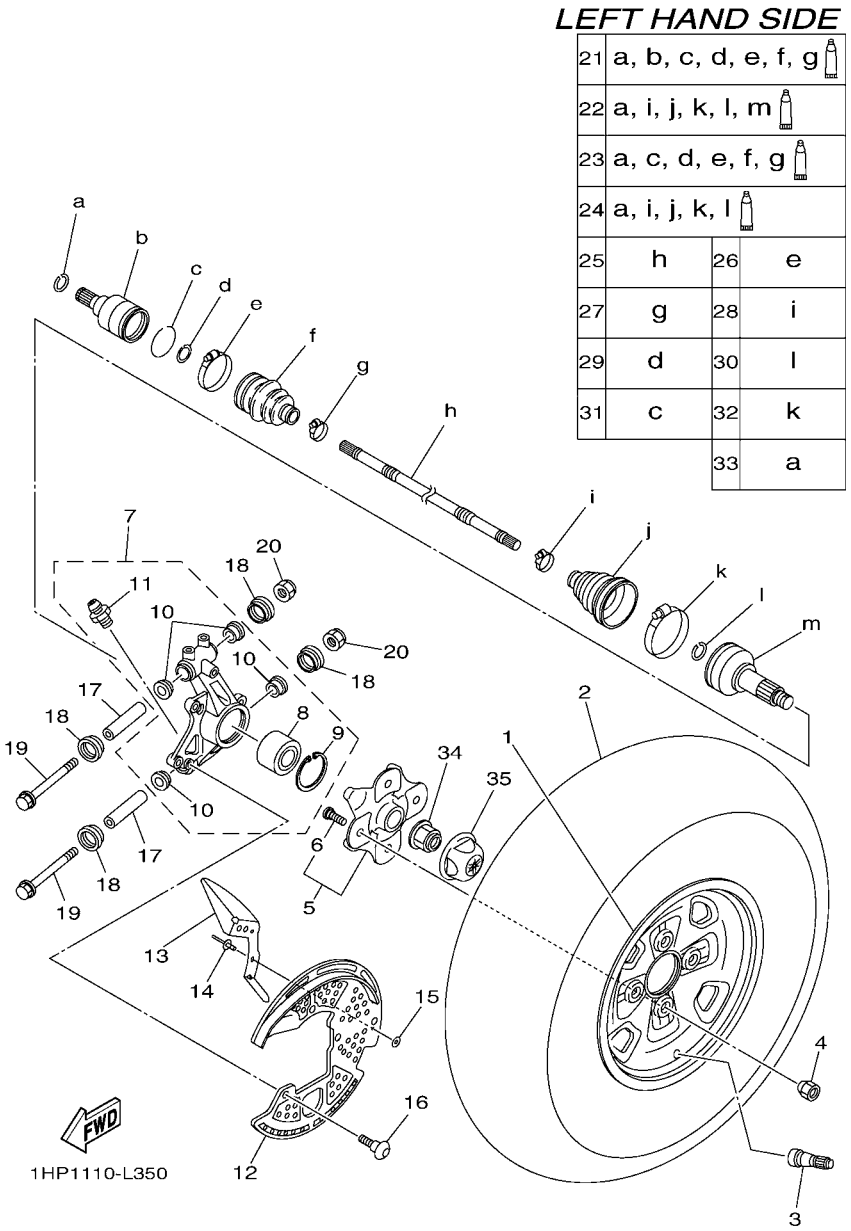

FIG. 35 REAR WHEEL

REF. NO.	PART NO.	DESCRIPTION	USA					REMARKS
28	28P–2512G–00	BOOT BAND (SMALL)	1					
29	3B4–2512J–00	SNAP RING	1					
30	3B4–2512H–00	CIRCLIP	1					
31	3B4–25182–00	CIRCLIP	1					
32	28P–2511H–00	BOOT BAND(DOUBLE OFFSET JOINT)	1					
33	3B4–2536E–00	CLIP, SPRING	1					
34	90179–20016	NUT	1					
35	1HP–F512A–00	CAP, WHEEL	1					

FIG. 36 REAR WHEEL 2

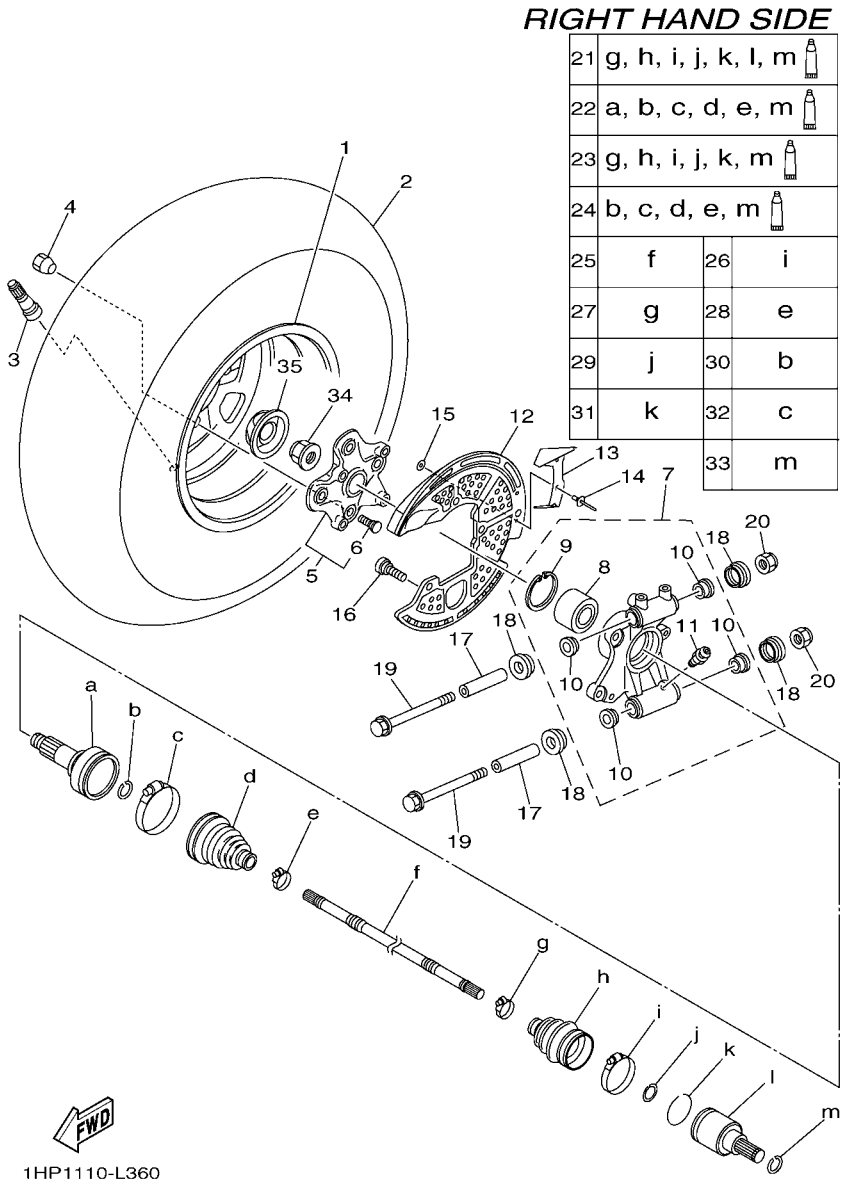

REF. NO.	PART NO.	DESCRIPTION	USA					REMARKS
1	1HP–F5390–10	REAR WHEEL COMP.	1					
2	94110–12814	TIRE(AT25X10-12 MU20**TL)	1					MAXXIS
3	93900–00813	VALVE, RIM (TR413)	1					MAXXIS
4	90179–10020	NUT	4					
5	3B4–25111–10	HUB, FRONT	1					
6	90114–10014	.BOLT, SERRATION	4					
7	1HP–F532F–00	REAR KNUCKLE ASSY.,2	1					
8	93305–00602	.BEARING	1					
9	99009–55500	.CIRCLIP	1					
10	90381–17067	.BUSH, SOLID	4					
11	93700–06004	.NIPPLE, GREASE	2					
12	3B4–2515A–00	RING, WHEEL 2	1					
13	3B4–2539G–00	PLATE 2	1					
14	90267–47187	RIVET, BLIND (4.7X16.4 BLACK)	2					
15	90201–04027	WASHER, PLATE	2					
16	90149–06117	SCREW	3					
17	5KM–23448–00	SPACER	2					
18	2NL–23517–00	COVER, THRUST 1	4					
19	90105–10212	BOLT, FLANGE	2					
20	90185–10012	NUT, SELF-LOCKING	2					
21	28P–2530V–01	DOUBLE OFF SET JOINT	1					
22	28P–2510F–02	BALL JOINT SET	1					
23	28P–2510H–02	BOOT SET(DOUBLE OFFSET JOINT)	1					
24	28P–2510G–01	BOOT SET (BALL JOINT)	1					
25	28P–2518E–10	SHAFT	1					
26	3B4–2511H–00	BOOT BAND(DOUBLE OFFSET JOINT)	1					
27	3B4–2512G–00	BOOT BAND (SMALL)	1					

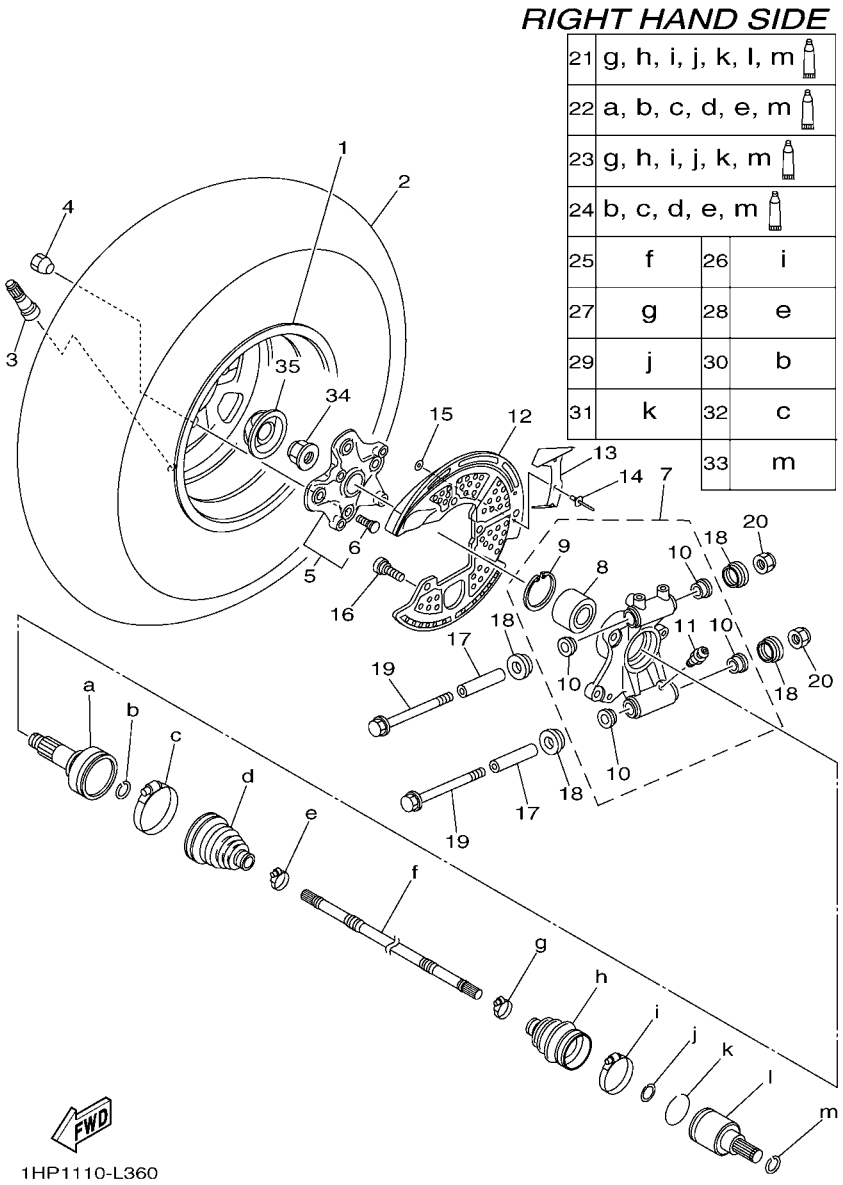

FIG. 36 REAR WHEEL 2

REF. NO.	PART NO.	DESCRIPTION	USA					REMARKS
28	28P–2512G–00	BOOT BAND (SMALL)	1					
29	3B4–2512J–00	SNAP RING	1					
30	3B4–2512H–00	CIRCLIP	1					
31	3B4–25182–00	CIRCLIP	1					
32	28P–2511H–00	BOOT BAND(DOUBLE OFFSET JOINT)	1					
33	3B4–2536E–00	CLIP, SPRING	1					
34	90179–20016	NUT	1					
35	1HP–F512A–00	CAP, WHEEL	1					

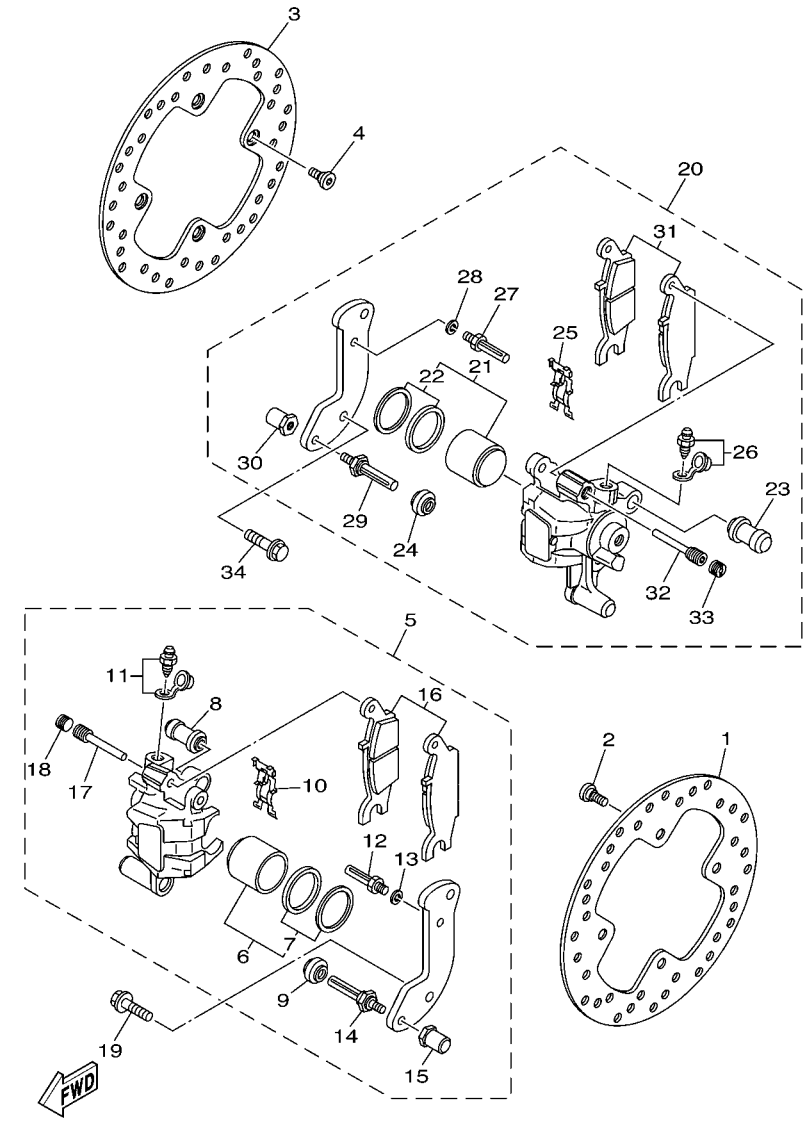

FIG. 37 REAR BRAKE CALIPER

REF. NO.	PART NO.	DESCRIPTION	USA					REMARKS
1	1HP–F582V–00	DISC, REAR BRAKE 1	1					
2	90109–08101	BOLT	4					
3	1HP–F582V–00	DISC, REAR BRAKE 1	1					
4	90109–08101	BOLT	4					
5	3B4–2580V–11	CALIPER ASSY, REAR 1	1					
6	3B4–W0057–20	.PISTON ASSY, CALIPER	1					
7	3B4–W0047–00	..CALIPER SEAL KIT	1					
8	1UY–25937–51	.BOOT 2	1					
9	3JD–25917–00	.BOOT, CALIPER	1					
10	5DH–25919–50	.SUPPORT, PAD	1					
11	1UY–W0048–50	.BLEED SCREW KIT	1					
12	1UY–25926–51	.BOLT	1					
13	1UY–25938–51	.WASHER, SPRING	1					
14	3JD–25926–00	.BOLT	1					
15	3JD–25961–00	.NUT	1					
16	3B4–W0046–00	.BRAKE PAD KIT 2	1					
17	3GD–25933–00	.PIN, PAD	1					
18	5DH–25916–00	.PLUG	1					
19	90105–08161	BOLT, FLANGE	2					
20	3B4–2580W–11	CALIPER ASSY, REAR 2	1					
21	3B4–W0057–20	.PISTON ASSY, CALIPER	1					
22	3B4–W0047–00	..CALIPER SEAL KIT	1					
23	1UY–25937–51	.BOOT 2	1					
24	3JD–25917–00	.BOOT, CALIPER	1					
25	5DH–25919–50	.SUPPORT, PAD	1					
26	1UY–W0048–50	.BLEED SCREW KIT	1					
27	1UY–25926–51	.BOLT	1					

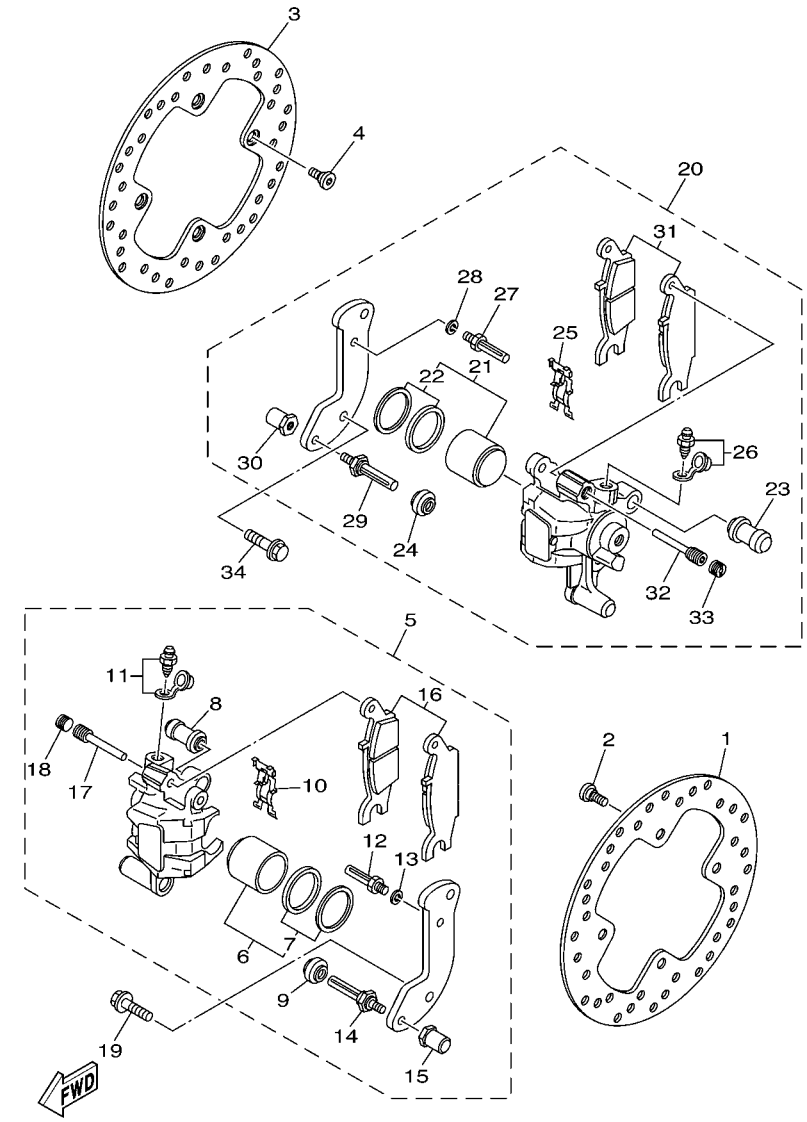

FIG. 37 REAR BRAKE CALIPER

REF. NO.	PART NO.	DESCRIPTION	USA					REMARKS
28	1UY–25938–51	.WASHER, SPRING	1					
29	3JD–25926–00	.BOLT	1					
30	3JD–25961–00	.NUT	1					
31	3B4–W0046–10	.BRAKE PAD KIT 2	1					
32	3GD–25933–00	.PIN, PAD	1					
33	5DH–25916–00	.PLUG	1					
34	90105–08161	BOLT, FLANGE	2					

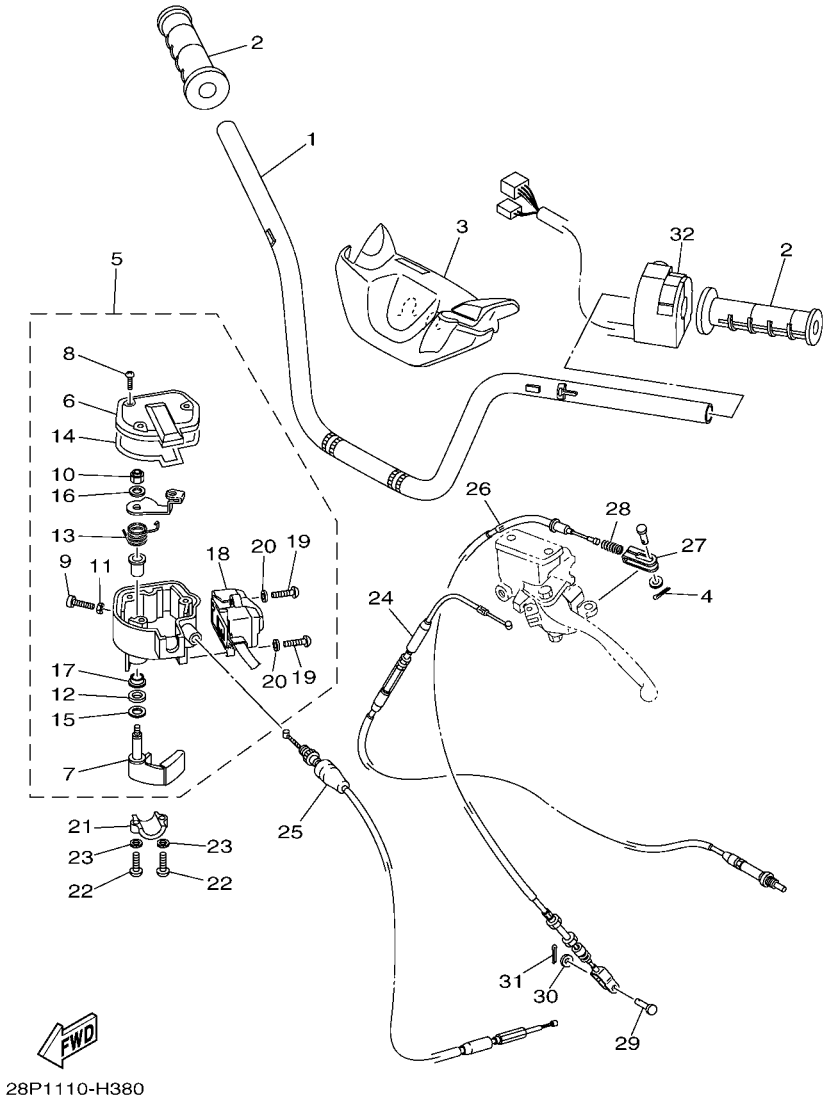

FIG. 38 STEERING HANDLE & CABLE

REF. NO.	PART NO.	DESCRIPTION	USA					REMARKS
1	1HP–F6111–00	HANDLEBAR	1					
2	5FU–F6241–10	GRIP	2					
3	1HP–F6124–00	PROTECTOR, HANDLEBAR	1					
4	91401–16012	PIN, COTTER	1					
5	1HP–26250–00	THROTTLE LEVER ASSY	1					
6	28P–2628F–00	.CAP, GEAR	1					
7	28P–2625G–00	.LEVER, THROTTLE	1					
8	90149–04278	.SCREW	3					
9	98507–05020	.SCREW, PAN HEAD	1					
10	95602–05100	.NUT, U	1					
11	95307–05700	.NUT	1					
12	93104–09025	.OIL SEAL	1					
13	1NV–26304–00	.SPRING	1					
14	28P–2628G–00	.GASKET	1					
15	1NV–26129–00	.WASHER	1					
16	1NV–26398–00	.WASHER	1					
17	1NV–2625K–00	.COLLAR	1					
18	1HP–83976–09	.SWITCH, HANDLE 1	1					
19	98502–04016	.SCREW, PAN HEAD	2					
20	92902–04600	.WASHER, PLATE	2					
21	1S3–82913–00	HOLDER, LEVER LOWER 1	1					
22	98502–05020	SCREW, PAN HEAD	2					
23	92902–05600	WASHER, PLATE	2					
24	3B4–2637F–10	CABLE, CONTROL 2	1					
25	3B4–26311–20	CABLE, THROTTLE 1	1					
26	3B4–26341–00	WIRE, BRAKE 1	1					
27	3B4–26347–00	JOINT, CABLE	1					

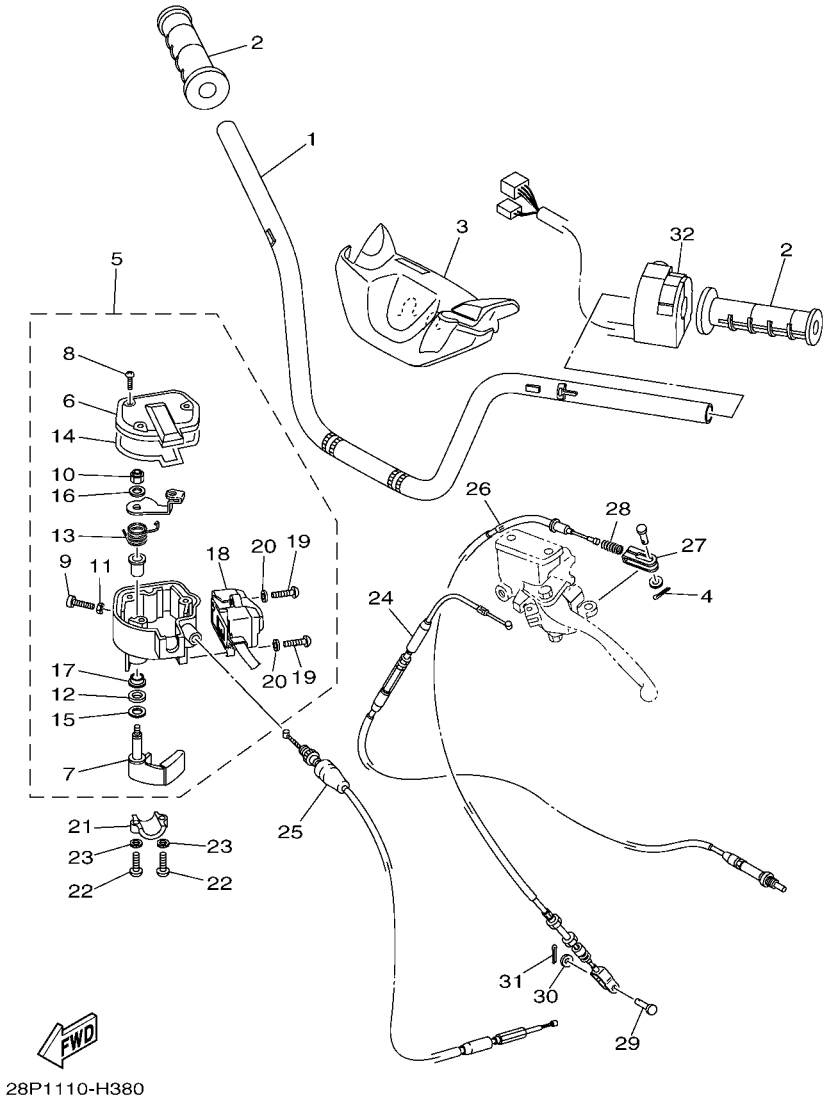

FIG. 38 STEERING HANDLE & CABLE

REF. NO.	PART NO.	DESCRIPTION	USA					REMARKS
28	90501–08665	SPRING, COMPRESSION	1					
29	90240–06076	PIN, CLEVIS	1					
30	92907–06200	WASHER	1					
31	91401–20012	PIN, COTTER	1					
32	28P–83972–00	SWITCH, HANDLE 4	1					

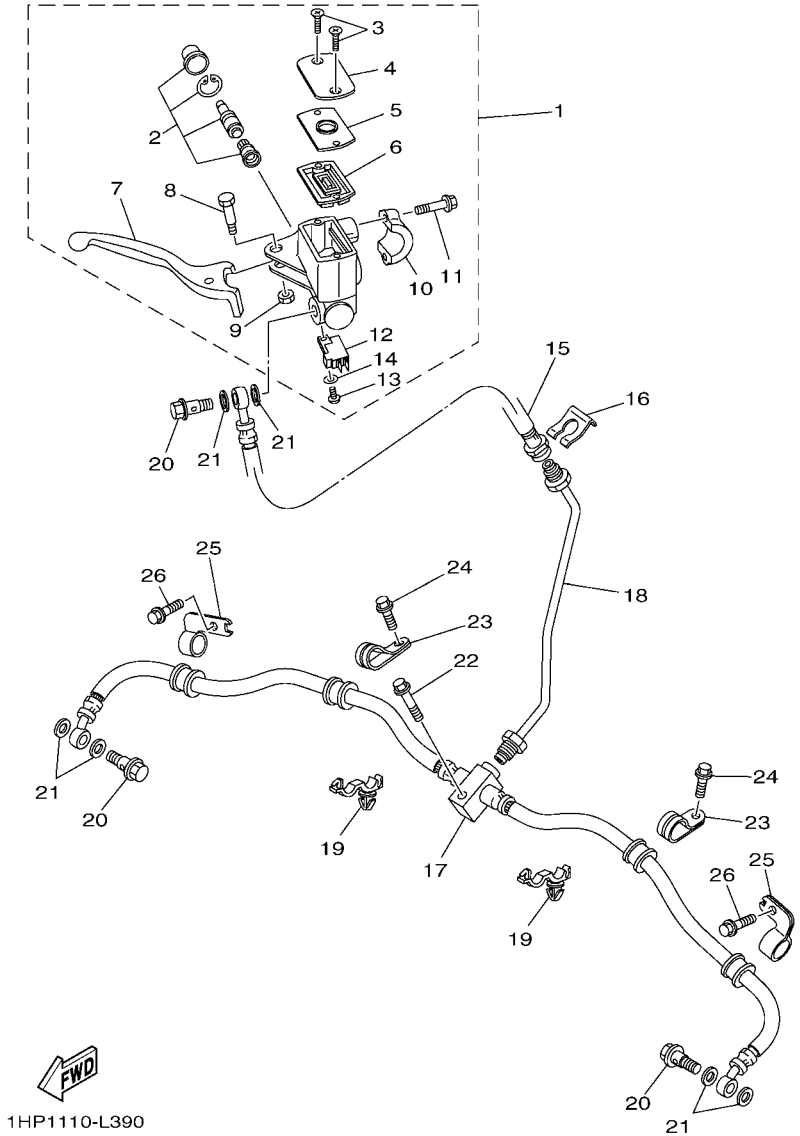

FIG. 39 FRONT MASTER CYLINDER

REF. NO.	PART NO.	DESCRIPTION	USA					REMARKS
1	3B4–2583T–10	MASTER CYLINDER ASSY	1					
2	5D3–W0041–00	.CYLINDER KIT, MASTER	1					
3	98702–04012	.SCREW, FLAT HEAD	2					
4	5YU–25852–00	.CAP, RESERVOIR	1					
5	3B4–2585B–00	.PLATE, DIAPHRAGM	1					
6	4TT–25854–00	.DIAPHRAGM, RESERVOIR	1					
7	3B4–83922–00	.LEVER 2	1					
8	3B4–2589F–00	.BOLT, LEVER	1					
9	95701–06500	.NUT, WITH WASHER	1					
10	5MV–25867–00	.BRACKET, MASTER CYLINDER	1					
11	5MV–25833–00	.BOLT, FITTING	2					
12	1HP–83980–00	.FRONT STOP SWITCH ASSY	1					
13	98502–04012	.SCREW, PAN HEAD	1					
14	92902–04600	.WASHER, PLATE	1					
15	1HP–F5872–00	HOSE, BRAKE 1	1					
16	2GU–25866–00	CIRCLIP	1					
17	1HP–F5873–00	HOSE, BRAKE 2	1					
18	1HP–F5871–00	PIPE, BRAKE	1					
19	90464–20010	CLAMP	2					
20	90401–10015	BOLT, UNION	3					
21	90201–10118	WASHER, PLATE	6					
22	95812–06025	BOLT, FLANGE	1					
23	3B4–25886–00	HOLDER, BRAKE HOSE	2					
24	95812–06012	BOLT, FLANGE	2					
25	3B4–25876–10	HOLDER, BRAKE HOSE 2	2					
26	95812–06012	BOLT, FLANGE	2					

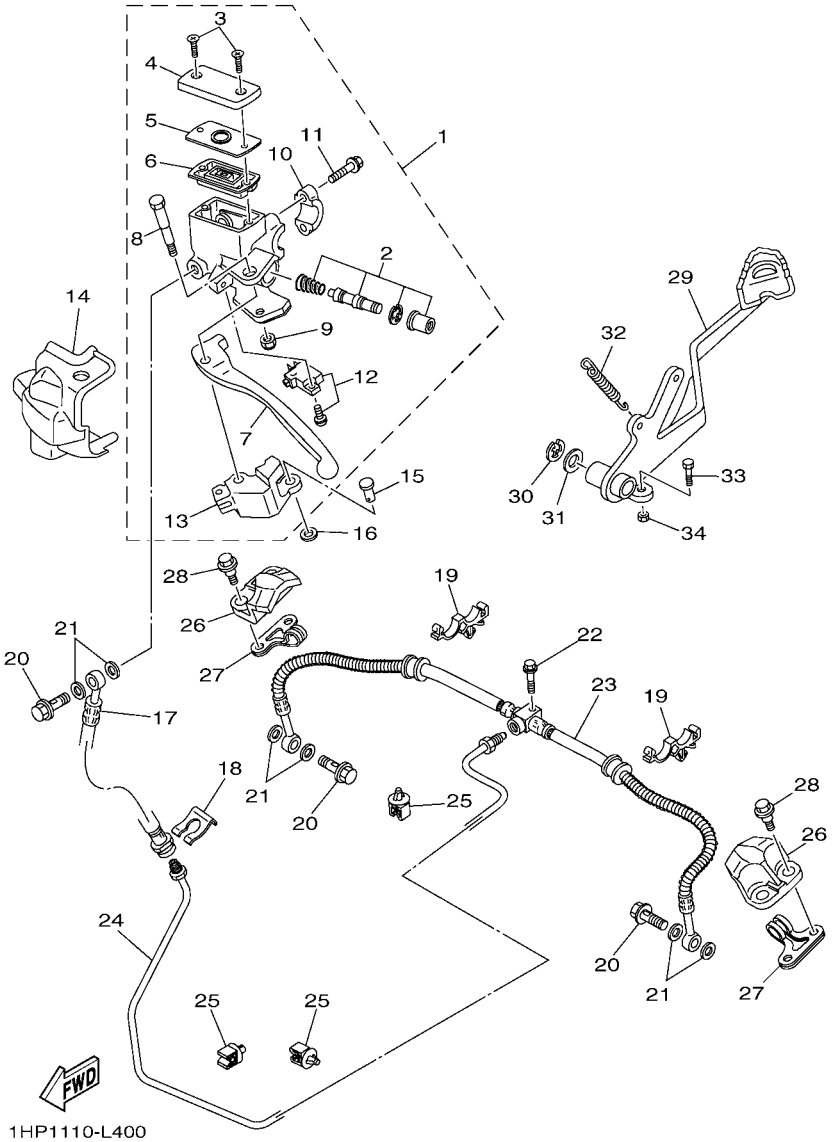

FIG. 40 REAR MASTER CYLINDER

REF. NO.	PART NO.	DESCRIPTION	USA					REMARKS
1	3B4–2583V–10	RR. MASTER CYLINDER ASSY.	1					
2	5D3–W0041–00	.CYLINDER KIT, MASTER	1					
3	98702–04012	.SCREW, FLAT HEAD	2					
4	5YU–25852–00	.CAP, RESERVOIR	1					
5	3B4–2585B–00	.PLATE, DIAPHRAGM	1					
6	4TT–25854–00	.DIAPHRAGM, RESERVOIR	1					
7	3B4–83912–00	.LEVER 1	1					
8	3B4–2589F–20	.BOLT, LEVER	1					
9	90170–06024	.NUT	1					
10	5MV–25867–00	.BRACKET, MASTER CYLINDER	1					
11	5MV–25833–00	.BOLT, FITTING	2					
12	1HP–82530–00	.STOP SWITCH ASSY	1					
13	3B4–26168–10	.KNOCKER	1					
14	3B4–26372–00	COVER, HANDLE LEVER 1	1					
15	90240–08013	PIN, CLEVIS	1					
16	92902–08600	WASHER, PLATE	1					
17	1HP–F5872–00	HOSE, BRAKE 1	1					
18	2GU–25866–00	CIRCLIP	1					
19	90464–16006	CLAMP	2					
20	90401–10015	BOLT, UNION	3					
21	90201–10118	WASHER, PLATE	6					
22	95812–06025	BOLT, FLANGE	1					
23	1HP–F5874–00	HOSE, BRAKE	1					
24	1HP–F5882–00	PIPE, BRAKE 2	1					
25	5KM–81677–00	CLAMP 1	4					
26	3B4–25715–00	COVER 1	2					
27	1HP–F588F–00	HOLDER, BRAKE HOSE 5	2					

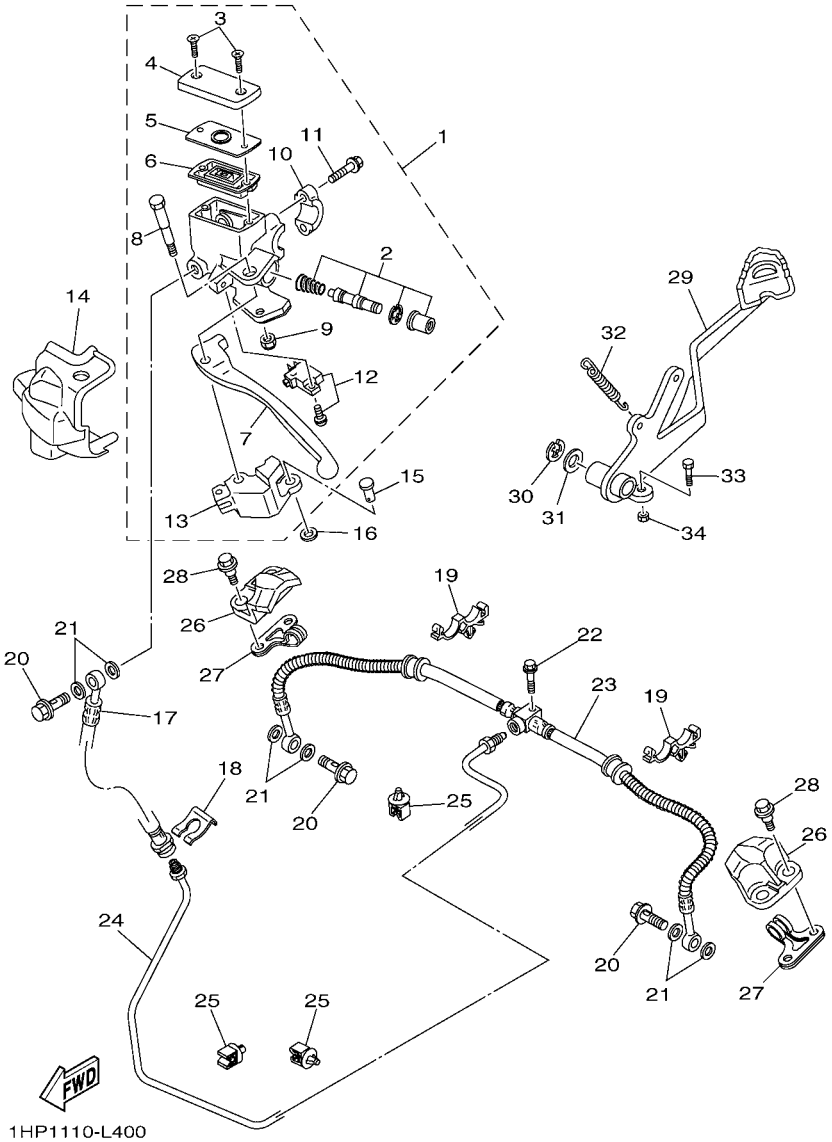

FIG. 40 REAR MASTER CYLINDER

REF. NO.	PART NO.	DESCRIPTION	USA					REMARKS
28	90109–06172	BOLT	4					
29	1HP–F7211–00	PEDAL, BRAKE	1					
30	99001–10600	CIRCLIP	1					
31	90201–14023	WASHER, PLATE	1					
32	90506–20014	SPRING, TENSION	1					
33	97022–06014	BOLT	1					
34	95302–06600	NUT	1					

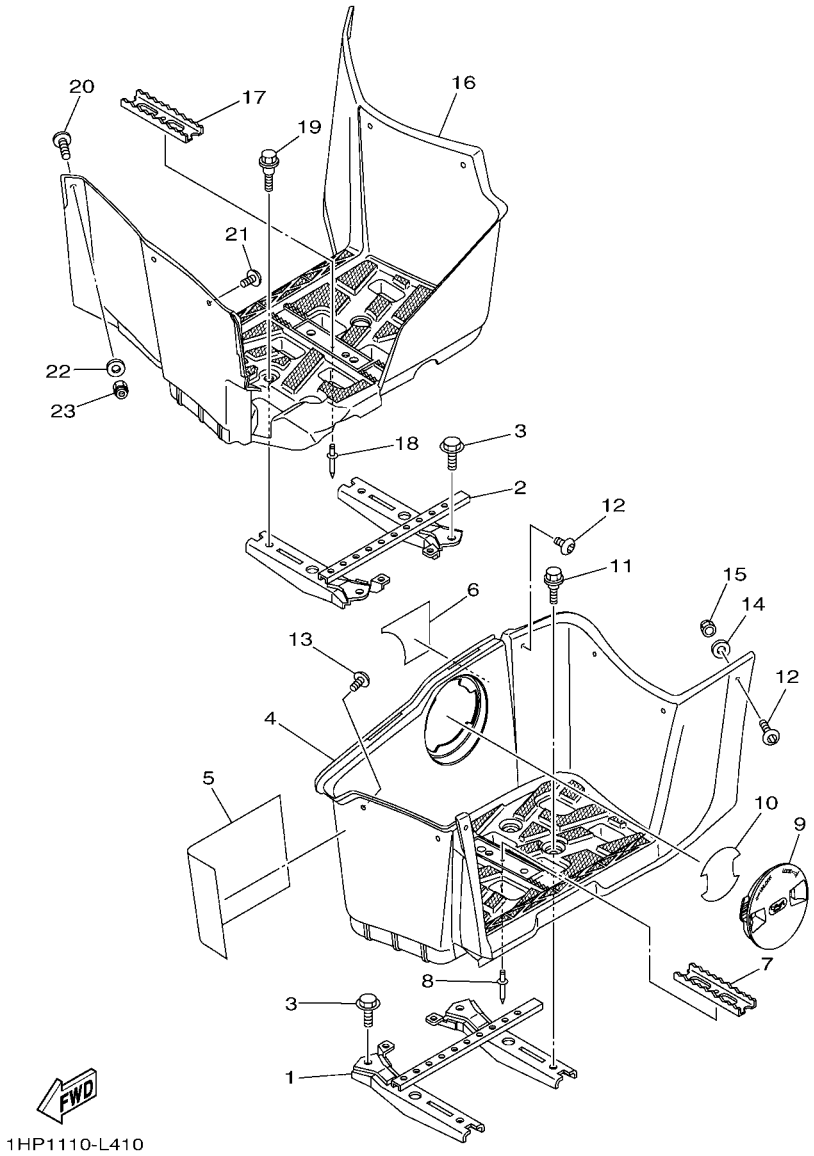

FIG. 41 STAND & FOOTREST

REF. NO.	PART NO.	DESCRIPTION	USA					REMARKS
1	1HP–F7452–00	BRACKET, FOOTREST 1	1					
2	1HP–F7462–00	BRACKET, FOOTREST 2	1					
3	95812–08012	BOLT, FLANGE	4					
4	1HP–F7453–00	COVER 1	1					
5	3B4–21732–00	SEAL 1	1					
6	1HP–F2875–00	SEAL 3	1					
7	5UH–F741A–10	ARM 1	1					
8	90267–489U9	RIVET, BLIND	1					
9	1HP–F8239–00	COVER 3	1					
10	1HP–F1735–00	SEAL 2	1					
11	90109–06172	BOLT	4					
12	90111–06814	BOLT,HEX. SOCKET BUTTON	6					
13	90111–06137	BOLT,HEX. SOCKET BUTTON	1					
14	90201–06078	WASHER, PLATE	6					
15	95702–06300	NUT, NYLON	6					
16	1HP–F7463–00	COVER 2	1					
17	5UH–F741A–10	ARM 1	1					
18	90267–489U9	RIVET, BLIND	1					
19	90109–06172	BOLT	4					
20	90111–06814	BOLT,HEX. SOCKET BUTTON	5					
21	90111–06137	BOLT,HEX. SOCKET BUTTON	1					
22	90201–06078	WASHER, PLATE	6					
23	95702–06300	NUT, NYLON	6					

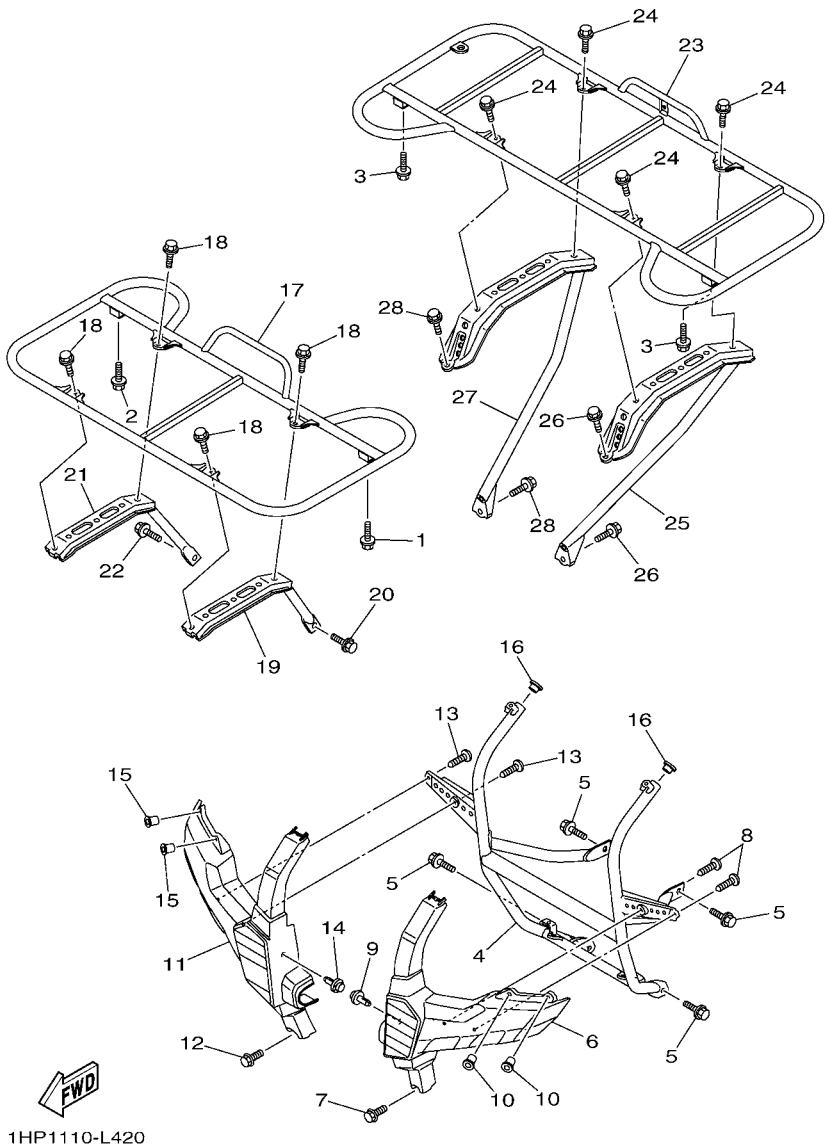

FIG. 42 GUARD

REF. NO.	PART NO.	DESCRIPTION	USA					REMARKS
1	90119–06152	BOLT, WITH WASHER	1					
2	90119–06152	BOLT, WITH WASHER	1					
3	90119–06152	BOLT, WITH WASHER	2					
4	1HP–F845N–00	BAR, CARRY FRONT	1					
5	95812–08014	BOLT, FLANGE	4					
6	1HP–F842M–00	COVER 1	1					
7	90105–06832	BOLT, FLANGE	1					
8	90167–06800	SCREW, TAPPING	2					
9	90269–07012	RIVET	1					
10	90179–05523	NUT	2					
11	1HP–F842N–00	COVER 2	1					
12	90105–06832	BOLT, FLANGE	1					
13	90167–06800	SCREW, TAPPING	2					
14	90269–07012	RIVET	1					
15	90179–05523	NUT	2					
16	90338–18122	PLUG	2					
17	1HP–F4841–00	CARRIER, FRONT	1					
18	95812–08014	BOLT, FLANGE	4					
19	1HP–F4821–00	STAY, FRONT CARRIER 1	1					
20	90119–08118	BOLT, WITH WASHER	1					
21	1HP–F4822–00	STAY, FRONT CARRIER 2	1					
22	90119–08118	BOLT, WITH WASHER	1					
23	1HP–F4842–00	CARRIER, REAR	1					
24	95812–08014	BOLT, FLANGE	4					
25	1HP–F482J–00	FRAME, CARRIER 1	1					
26	90119–10044	BOLT, WITH WASHER	2					
27	1HP–F482K–00	FRAME, CARRIER 2	1					

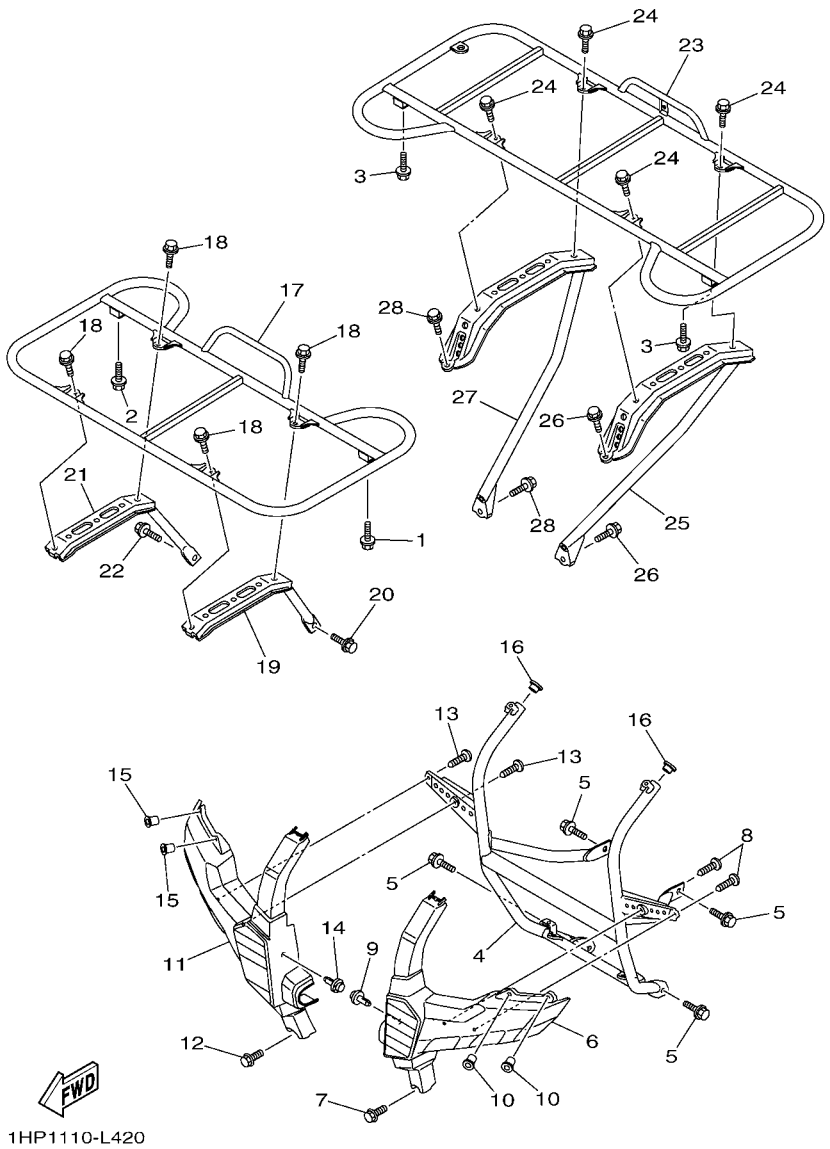

FIG. 42 GUARD

REF. NO.	PART NO.	DESCRIPTION	USA					REMARKS
28	90119–10044	BOLT, WITH WASHER	2					

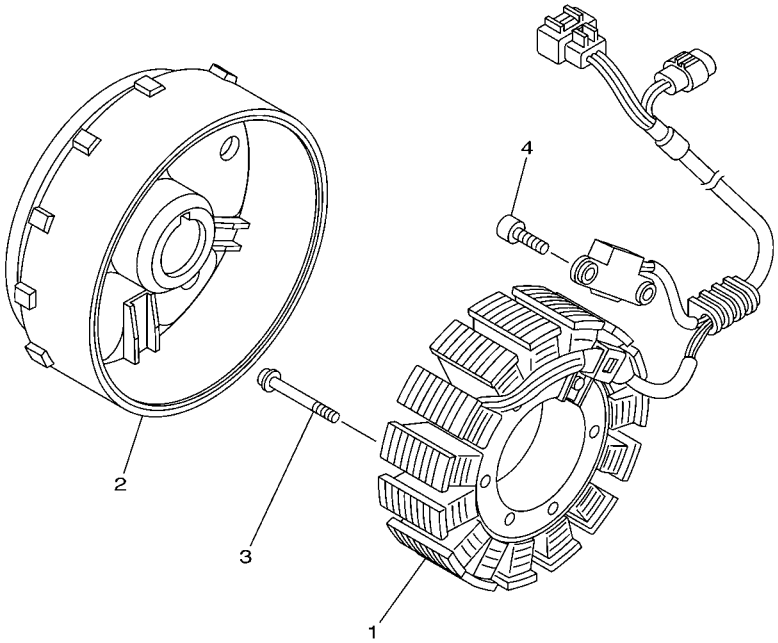

3B41100-F430

FIG. 43 GENERATOR

REF. NO.	PART NO.	DESCRIPTION	USA					REMARKS
1	28P–81410–01	STATOR ASSY	1					
2	28P–81450–01	ROTOR ASSY	1					
3	92012–06030	BOLT, BUTTON HEAD	3					
4	91312–05014	BOLT	2					

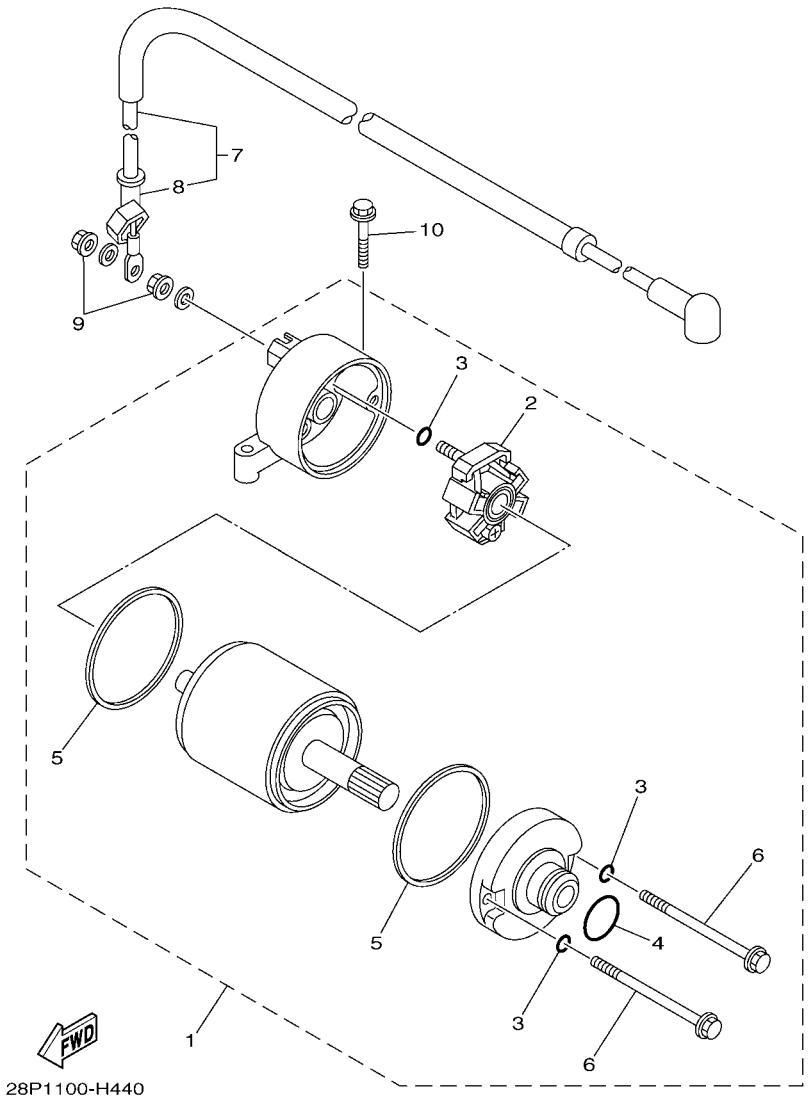

FIG. 44 STARTING MOTOR

REF. NO.	PART NO.	DESCRIPTION	USA					REMARKS
1	28P–81890–00	MOTOR ASSY	1					
2	4B5–81840–00	.BRUSH HOLDER ASSY	1					
3	3TB–81847–00	.O-RING	3					
4	1FK–81847–00	.O-RING	1					
5	11H–81844–00	.GASKET	2					
6	28P–81826–00	.BOLT	2					
7	28P–81815–00	CORD, STARTER MOTOR	1					
8	4B5–81871–00	.CAP	1					
9	4XV–8182A–00	NUT	2					
10	95022–06030	BOLT, FLANGE	2					

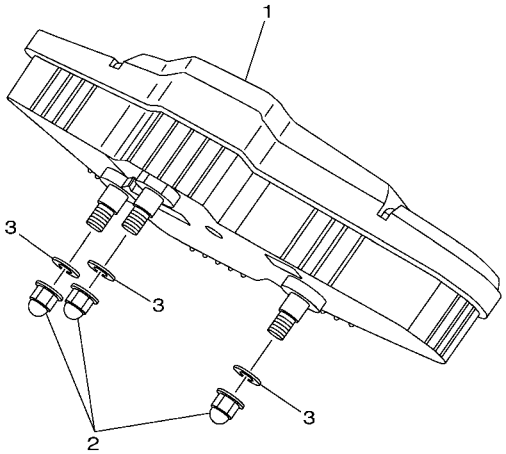

3B49100-G450

FIG. 45 METER

REF. NO.	PART NO.	DESCRIPTION	USA					REMARKS
1	1HP–83500–00	METER ASSY	1					
2	95302–05800	NUT, CROWN	3					
3	90201–05039	WASHER, PLATE	3					

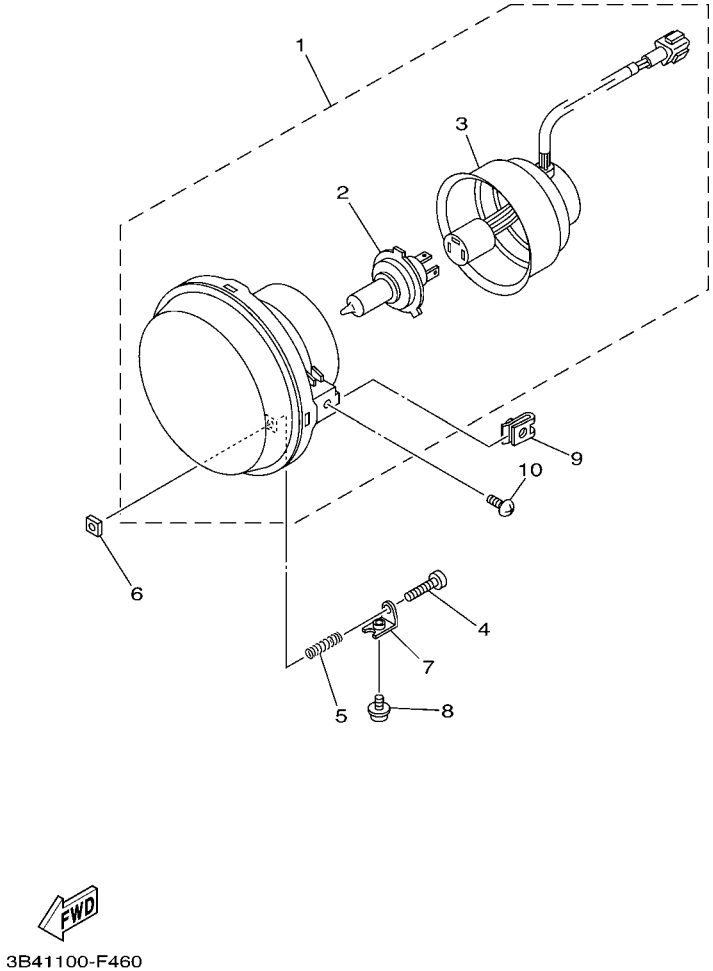

FIG. 46 HEADLIGHT

REF. NO.	PART NO.	DESCRIPTION	USA					REMARKS
1	28P–84300–00	HEADLIGHT ASSY	2					
2	28P–84314–00	.BULB, HEADLIGHT (12V 35/35W)	1					
3	3B4–84340–00	.SOCKET CORD ASSY 1	1					
4	98502–03530	SCREW, PAN HEAD	2					
5	90501–05764	SPRING, COMPRESSION	2					
6	2GU–84334–00	NUT, ADJUSTING	2					
7	5GH–84703–10	BRACKET	2					
8	90159–05044	SCREW, WITH WASHER	2					
9	90183–05008	NUT, SPRING	4					
10	90154–05021	SCREW, BINDING	4					

FIG. 47 TAILLIGHT

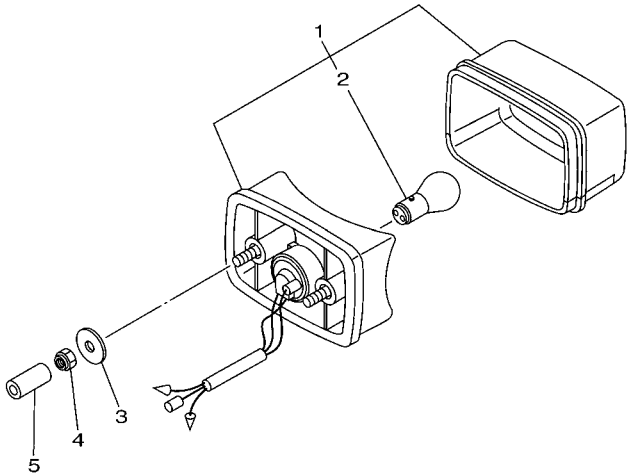

3B41100-F470

REF. NO.	PART NO.	DESCRIPTION	USA					REMARKS
1	3FA–84710–00	TAILLIGHT UNIT ASSY	1					
2	1A2–84714–41	.BULB (12V-21/5W)	1					
3	90201–06097	WASHER, PLATE	2					
4	95702–06300	NUT, NYLON	2					
5	90445–09220	HOSE (L30)	1					

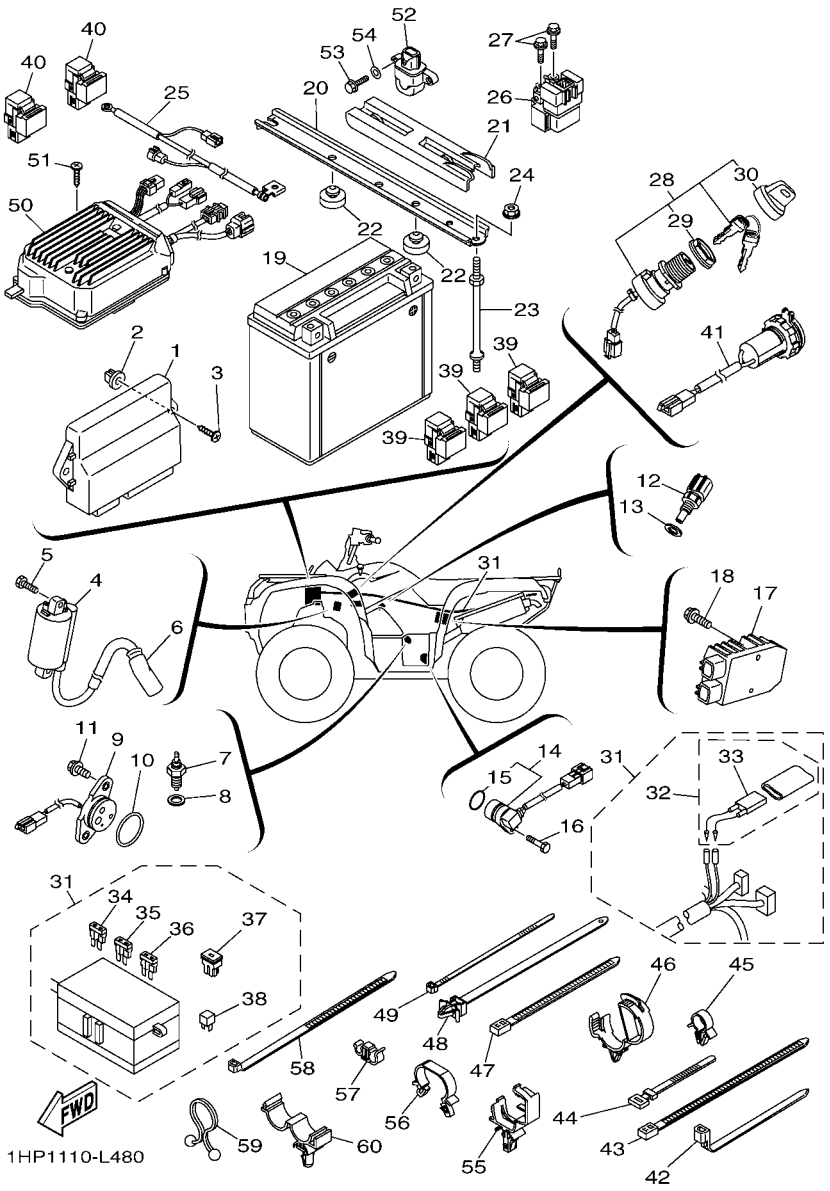

FIG. 48 ELECTRICAL 1

REF. NO.	PART NO.	DESCRIPTION	USA					REMARKS
1	1HP–8591A–00	ENGINE CONTROL UNIT ASSY	1					
2	90338–08226	PLUG	1					
3	97702–60025	SCREW, TAPPING	1					
4	1D7–82310–01	IGNITION COIL ASSY	1					
5	97002–06016	BOLT	2					
6	28P–82370–00	PLUG CAP ASSY	1					
7	3GB–82540–01	NEUTRAL SWITCH ASSY	1					
8	90430–10148	GASKET	1					
9	3B4–82540–01	NEUTRAL SWITCH ASSY	1					
10	93210–29196	O-RING	1					
11	90119–06137	BOLT, WITH WASHER	2					
12	8CC–85790–01	THERMOSENSOR ASSY	1					
13	90430–12202	GASKET	1					
14	3B4–83755–00	SENSOR, SPEED	1					
15	4D9–81168–00	.O-RING	1					
16	91312–06020	BOLT	1					
17	1D7–81960–00	RECTIFIER & REGULATOR ASSY	1					
18	95812–06020	BOLT, FLANGE	2					
19	5FU–H2100–20	BATTERY ASSY (YUASA YTX20L-BS)	1					
20	1HP–H2128–00	BRACKET, BATTERY	1					
21	3B4–82129–00	COVER, BATTERY	1					
22	22W–24741–00	PAD, SEAT	2					
23	3B4–82133–10	SCREW, FITTING	2					
24	95702–06500	NUT, FLANGE	2					
25	34D–82116–00	WIRE, MINUS LEAD	1					
26	3B4–81940–00	STARTER RELAY ASSY	1					
27	95022–06008	BOLT, FLANGE	2					

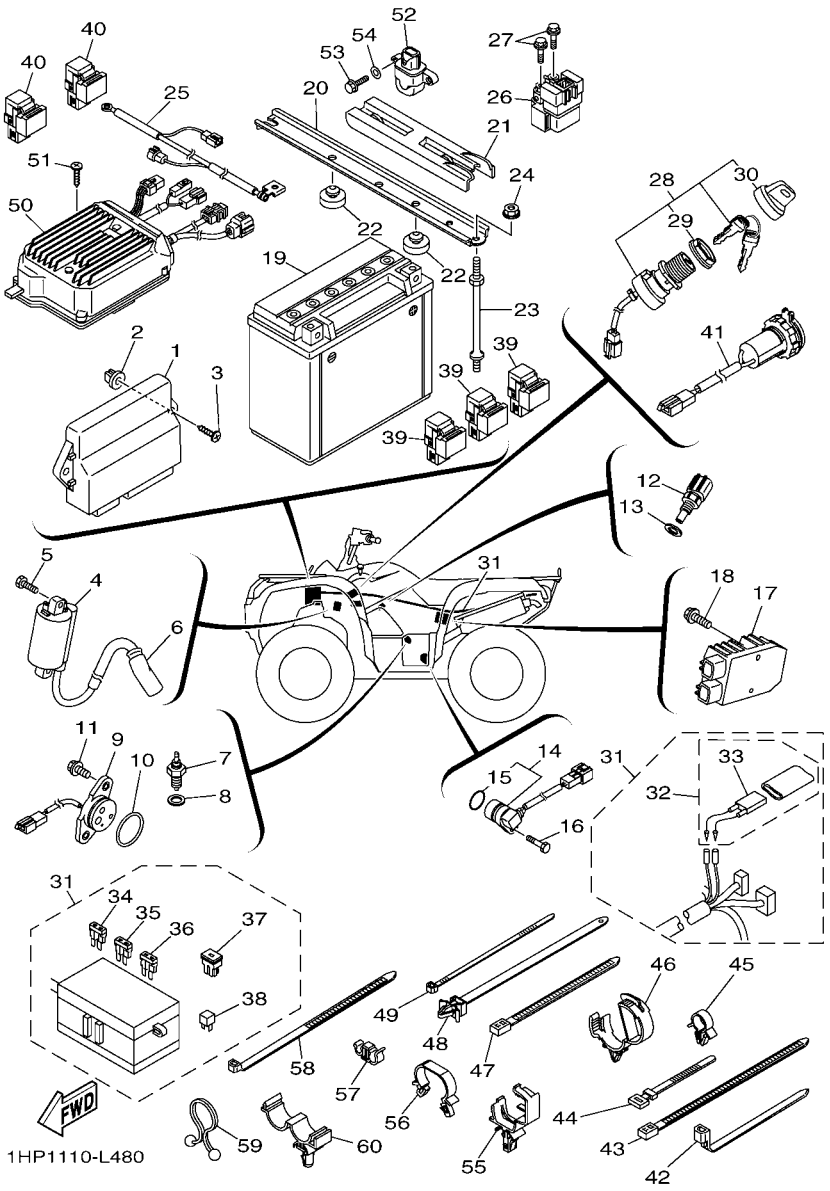

FIG. 48 ELECTRICAL 1

REF. NO.	PART NO.	DESCRIPTION	USA					REMARKS
28	28P–82510–00	MAIN SWITCH ASSY	1					
29	3HN–82569–00	.NUT, MAIN SWITCH	1					
30	3HN–82579–00	.CAP, KEY	1					
31	1HP–82590–00	WIRE HARNESS ASSY	1					
32	4GB–82180–00	.CIRCUIT BREAKER ASSY	1					
33	4GB–82560–00	..THERMO SWITCH ASSY	1					
34	5JJ–82151–30	.FUSE (10A-BL)	5					
35	5JJ–82151–20	.FUSE (20A-BL)	2					
36	5JJ–82151–90	.FUSE (5A-BL)	2					
37	5PS–82151–00	.FUSE (40A)	2					
38	3WP–81980–00	.DIODE ASSY	1					
39	5DM–81950–00	RELAY ASSY (G8HN-1C4T-DJ-Y52)	3					
40	8FP–81950–01	RELAY ASSY	2					
41	1HP–H254B–00	TERMINAL COMP.	1					
42	90464–15195	CLAMP	2					
43	90464–40825	CLAMP	4					
44	437–83936–01	BAND, SWITCH CORD	4					
45	90464–15157	CLAMP	5					
46	90464–20181	CLAMP	2					
47	90464–31827	CLAMP	1					122X4.80
48	90464–10112	CLAMP	1					
49	5Y9–12491–00	CLAMP 1	2					
50	3B4–859A0–10	POWER STRG. CONT. UNIT ASSY	1					
51	98902–06020	SCREW, BIND	1					
52	3B4–82576–00	SENSOR, LEAN ANGLE	1					
53	97002–05016	BOLT	2					
54	92902–05600	WASHER, PLATE	2					

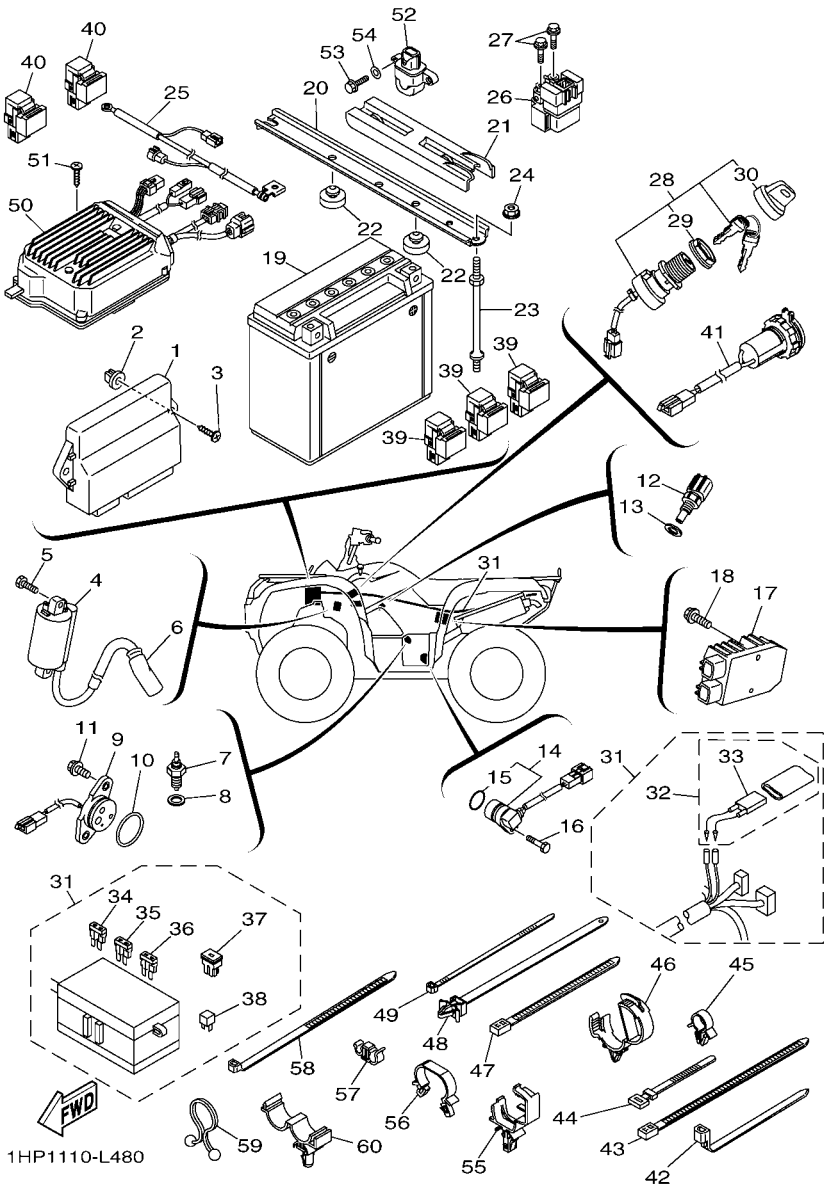

FIG. 48 ELECTRICAL 1

REF. NO.	PART NO.	DESCRIPTION	USA					REMARKS
55	90464–20237	CLAMP	2					
56	90464–24230	CLAMP	1					
57	90464–09013	CLAMP	2					
58	90464–12045	CLAMP	3					
59	90464–14800	CLAMP	1					
60	90464–16012	CLAMP	1					

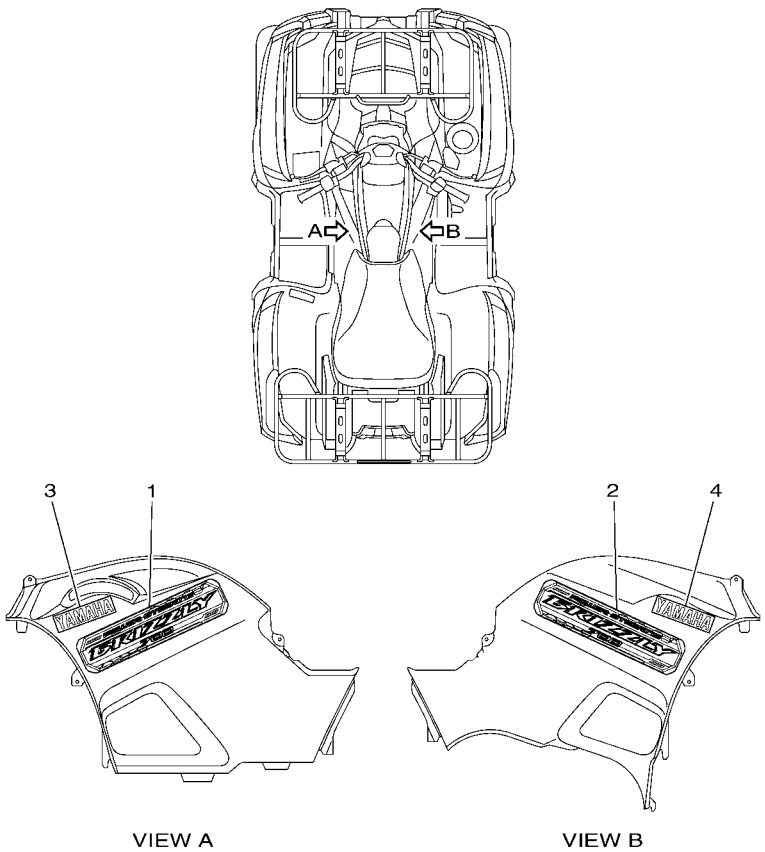

1HP1110-L490

FIG. 49 GRAPHICS

REF. NO.	PART NO.	DESCRIPTION	USA					REMARKS
1	1HP–F1788–10	GRAPHIC	1					
2	1HP–F1788–10	GRAPHIC	1					
3	5UG–F153A–30	EMBLEM, YAMAHA	1					
4	5UG–F153A–30	EMBLEM, YAMAHA	1					

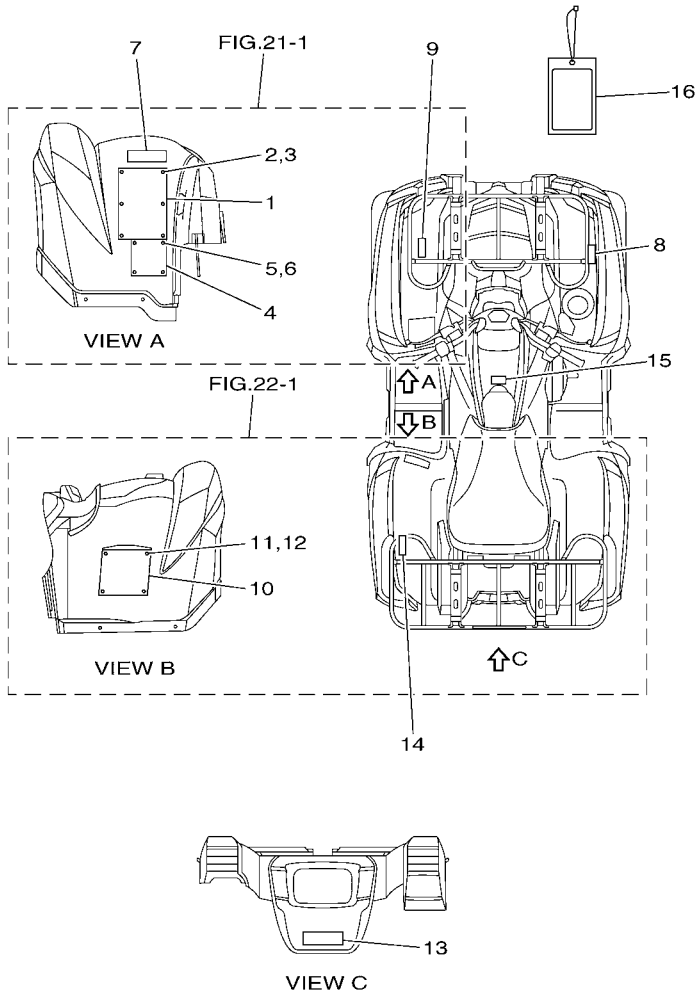

1HP1110-L500

FIG. 50 EMBLEM & LABEL 1

REF. NO.	PART NO.	DESCRIPTION	USA					REMARKS
1	4XE–F1568–00	LABEL, WARNING	1					ENGLISH
2	4XE–F1539–10	RIVET	6					
3	4XE–F1549–00	WASHER, FENDER MOLD	6					
4	1P0–F816L–00	LABEL, WARNING AGE	1					ENGLISH
5	4XE–F1539–10	RIVET	4					
6	4XE–F1549–00	WASHER, FENDER MOLD	4					
7	5ND–F151E–00	LABEL 2	1					ENGLISH
8	37S–F151F–U0	LABEL 3	1					
9	1HP–F4877–U0	LABEL, CAUTION	1					
10	1HP–F816M–U0	LABEL, WARNING TIRE & LOAD	1					
11	4XE–F1539–10	RIVET	4					
12	4XE–F1549–00	WASHER, FENDER MOLD	4					
13	37S–F151K–00	LABEL 7	1					ENGLISH
14	1HP–F4897–00	EMBLEM	1					
15	5ND–F1558–00	LABEL, WARNING 2	1					ENGLISH
16	4XE–F819R–20	TAG, WARNING	1					

PART NO.	REF. NO.
16B–11102–00	1 – 1
5VK–1111F–00	5 – 7
4G0–11133–11	1 – 2
3B4–11165–10	1 – 12
3B4–11166–01	1 – 20
371–11167–01	1 – 13
3B4–11181–00	1 – 4
3B4–11185–00	1 – 11
1S3–11186–00	1 – 17
214–11198–01	8 – 5
	26 – 27
	27 – 25
3B4–11311–10	2 – 1
1S3–11351–00	2 – 2
3B4–11400–00	3 – 1
3B4–11401–09	3 – 2
3B4–11402–09	3 – 3
3B4–11447–00	3 – 21
3B4–11454–00	3 – 22
1HP–11531–00	3 – 23
5KM–11536–10	3 – 7
5KM–11565–00	3 – 8
1S3–11603–10	3 – 17
1S3–11631–10	3 – 16
5VK–11633–00	3 – 18
1S3–11651–00	3 – 6
1S3–11681–00	3 – 4
5VK–12111–00	4 – 1
5VK–12113–00	4 – 3
3YF–12116–00	4 – 4
3YF–12117–01	4 – 6
4G0–12118–00	4 – 7
5H0–12119–00	4 – 5
5VK–12121–00	4 – 2
5VK–12146–00	4 – 10
5VK–12151–00	4 – 8
5XT–12159–00	4 – 11
5VK–12161–00	4 – 9
3B4–12170–01	5 – 1
1S3–12176–00	5 – 9
3TB–12210–00	5 – 15
4DW–12213–00	5 – 17
3B4–12221–00	8 – 12
3B4–12231–01	5 – 12
3B4–12241–00	5 – 13
1S3–12280–01	5 – 4
5VK–12284–00	5 – 2
1S3–12290–00	5 – 3

PART NO.	REF. NO.
3B4–12411–00	7 – 5
1S3–12413–00	7 – 6
3B4–12422–00	6 – 10
3B4–12428–00	6 – 17
11H–12438–10	6 – 15
5D3–1243K–00	6 – 13
3B4–12450–00	6 – 9
5KM–12469–00	6 – 6
3B4–12481–00	6 – 1
5Y9–12491–00	48 – 49
3B4–12577–01	6 – 4
3B4–13160–00	10 – 13
28P–13161–00	8 – 22
3B4–13171–00	8 – 14
3B4–13300–00	8 – 1
3B4–13329–00	8 – 2
1HP–13354–00	3 – 24
3B4–13355–00	8 – 8
5GH–13440–20	8 – 6
25G–13490–00	8 – 20
28P–13543–00	10 – 5
8FP–13556–00	10 – 2
3B4–13586–00	9 – 1
43P–13750–10	10 – 1
3B4–13761–00	10 – 3
3B4–13907–10	30 – 2
3B4–13971–10	30 – 29
5LP–14147–00	10 – 17
5PS–14147–00	10 – 4
1UY–14155–00	10 – 15
1S3–14161–00	10 – 16
8CC–14216–10	10 – 11
5JW–14348–00	10 – 6
3B4–14402–03	9 – 5
3B4–14409–00	9 – 10
3B4–14411–21	9 – 4
3B4–14424–00	9 – 11
3B4–14453–00	9 – 6
3B4–14455–00	9 – 21
3B4–14457–00	9 – 9
59V–14457–00	9 – 15
3YF–14613–01	11 – 35
3B4–14759–01	11 – 33
3B4–15100–25	12 – 1
3B4–15112–02	12 – 12
3B4–15113–00	13 – 8
3B4–15163–00	15 – 3
36Y–15189–00	12 – 2

PART NO.	REF. NO.
1HP–15191–00	13 – 4
3B4–15315–00	13 – 16
5KM–15351–00	13 – 29
3B4–15362–01	12 – 11
5UG–15371–00	26 – 28
3B4–15379–00	13 – 27
4WV–15381–00	13 – 24
11H–15383–02	17 – 3
3B4–15388–00	12 – 15
3B4–15411–10	13 – 1
3B4–15421–00	13 – 14
3B4–15431–00	13 – 26
3B4–15442–00	13 – 18
3B4–15451–00	13 – 2
3B4–15453–00	13 – 15
3B4–15463–00	15 – 11
1HP–15515–00	14 – 1
3B4–15517–01	14 – 4
3B4–15522–00	14 – 3
1S3–15560–01	14 – 5
5KM–15590–00	14 – 7
3B4–16181–00	3 – 20
16B–16611–01	15 – 1
3B4–16620–00	15 – 2
4SH–16664–00	15 – 9
3B4–17223–10	16 – 20
3B4–17233–00	16 – 15
16B–17243–00	16 – 26
3B4–17253–00	16 – 11
3B4–17285–02	16 – 18
3B4–17421–00	16 – 7
3B4–17432–01	16 – 25
3B4–17473–00	16 – 8
3B4–17520–00	16 – 30
3B4–17521–00	17 – 1
3B4–17530–01	17 – 8
3B4–17531–00	17 – 20
3B4–17531–10	17 – 20
3B4–17531–20	17 – 20
3B4–17531–30	17 – 20
3B4–17531–40	17 – 20
3B4–17531–50	17 – 20
5KM–17531–50	17 – 5
3B4–17531–60	17 – 20
5KM–17531–60	17 – 5
5KM–17531–70	17 – 5
5KM–17531–80	17 – 5
5KM–17531–90	17 – 5

PART NO.	REF. NO.
5KM–17531–A0	17 – 5
5KM–17531–B0	17 – 5
3B4–17551–00	17 – 9
3B4–1755A–00	17 – 21
3B4–17582–00	16 – 13
3B4–17606–00	15 – 15
3B4–17611–00	15 – 26
3B4–17623–01	15 – 18
3B4–17632–01	15 – 17
4WV–17639–10	15 – 22
3B4–17641–00	15 – 25
4WV–17644–00	15 – 36
3B4–17645–00	15 – 20
3B4–17653–00	15 – 19
3B4–17660–10	15 – 29
4CW–17664–00	15 – 33
3B4–17670–10	15 – 30
3B4–17681–10	16 – 1
4WV–17684–00	15 – 35
3B4–17832–10	17 – 14
	17 – 22
3B4–18103–11	19 – 8
28P–18104–00	19 – 9
28P–18115–00	19 – 17
3B4–18125–00	19 – 23
28P–18140–01	18 – 22
3B4–18146–00	19 – 12
3B4–18160–00	19 – 29
3B4–18169–20	19 – 21
5KM–18171–00	18 – 2
28P–18174–00	19 – 27
3B4–18190–20	19 – 20
5KM–18191–00	19 – 7
3B4–18196–00	19 – 24
4SH–18198–00	19 – 1
3B4–18318–00	18 – 21
3B4–18331–00	18 – 4
3B4–18380–00	19 – 10
3B4–18511–11	18 – 12
3B4–18512–11	18 – 13
3B4–18531–00	18 – 14
3B4–18540–20	18 – 1
5KM–18542–00	18 – 9
1J7–18547–00	18 – 26
4UN–18566–00	18 – 10
3B4–18581–00	12 – 5
3B4–2113B–01	20 – 17
3B4–21485–00	20 – 2

PART NO.	REF. NO.
3B4–21485–00	20 – 3
3B4–21541–00	21 – 2
	21 – 10
3B4–215A1–00	21 – 20
3B4–21652–00	22 – 2
3B4–21717–00	23 – 16
	23 – 24
3B4–21732–00	41 – 5
3B4–2173M–00	23 – 19
3B4–2173N–00	23 – 15
3B4–21747–01	23 – 12
3B4–2174A–00	23 – 14
3B4–2174Y–00	23 – 18
	23 – 26
3B4–2177K–00	23 – 11
3B4–2177N–00	23 – 21
1S3–21875–00	23 – 2
5KM–22149–10	24 – 4
	24 – 8
	24 – 12
	24 – 16
	29 – 13
	29 – 16
5KM–23448–00	35 – 17
	36 – 17
2NL–23517–00	35 – 18
	36 – 18
5LP–23579–00	29 – 3
	29 – 7
3B4–23579–01	32 – 10
	33 – 10
8K1–23814–00	28 – 1
3B4–2381B–01	28 – 17
5KM–23831–00	28 – 28
1UY–23841–01	28 – 29
1UY–23845–01	28 – 30
16B–2385L–10	25 – 7
16B–2385M–10	25 – 8
3B4–23875–10	28 – 12
1UY–23894–01	28 – 10
3B4–238B0–30	28 – 19
3B4–2414F–00	30 – 24
3B4–24182–00	30 – 28
28P–24380–00	30 – 9
1S3–24486–00	30 – 4
3B4–24491–00	30 – 3
3B4–24610–10	30 – 6
22W–24741–00	48 – 22

PART NO.	REF. NO.
28P–2510F–01	32 – 15
	33 – 15
28P–2510F–02	35 – 22
	36 – 22
28P–2510G–00	32 – 17
	33 – 17
28P–2510G–01	35 – 24
	36 – 24
28P–2510H–01	32 – 16
	33 – 16
28P–2510H–02	35 – 23
	36 – 23
28P–2510J–01	32 – 14
	33 – 14
3B4–25111–10	32 – 5
	33 – 5
	35 – 5
	36 – 5
28P–2511H–00	32 – 25
	33 – 25
	35 – 32
	36 – 32
3B4–2511H–00	32 – 19
	33 – 19
	35 – 26
	36 – 26
28P–2512G–00	32 – 21
	33 – 21
	35 – 28
	36 – 28
3B4–2512G–00	32 – 20
	33 – 20
	35 – 27
	36 – 27
3B4–2512H–00	32 – 23
	33 – 23
	35 – 30
	36 – 30
3B4–2512J–00	32 – 22
	33 – 22
	35 – 29
	36 – 29
3B4–2514A–00	32 – 12
	35 – 12
3B4–2515A–00	33 – 12
	36 – 12
3B4–25182–00	32 – 24
	33 – 24

PART NO.	REF. NO.
3B4–25182–00	35 – 31
	36 – 31
28P–2518E–00	32 – 18
	33 – 18
28P–2518E–10	35 – 25
	36 – 25
28P–2530V–01	35 – 21
	36 – 21
3B4–2536E–00	35 – 33
	36 – 33
3B4–2539F–00	35 – 13
3B4–2539G–00	36 – 13
3B4–25715–00	40 – 26
3B4–2580T–02	34 – 5
3B4–2580U–02	34 – 20
3B4–2580V–11	37 – 5
3B4–2580W–11	37 – 20
5MV–25833–00	39 – 11
	40 – 11
3B4–2583T–10	39 – 1
3B4–2583V–10	40 – 1
5YU–25852–00	39 – 4
	40 – 4
4TT–25854–00	39 – 6
	40 – 6
3B4–2585B–00	39 – 5
	40 – 5
2GU–25866–00	39 – 16
	40 – 18
5MV–25867–00	39 – 10
	40 – 10
3B4–25875–00	24 – 24
3B4–25876–10	39 – 25
3B4–25886–00	39 – 23
3B4–2589F–00	39 – 8
3B4–2589F–20	40 – 8
5DH–25916–00	34 – 18
	34 – 33
	37 – 18
	37 – 33
3JD–25917–00	34 – 9
	34 – 24
	37 – 9
	37 – 24
5DH–25919–00	34 – 10
	34 – 25
5DH–25919–50	37 – 10
	37 – 25

PART NO.	REF. NO.
3JD–25926–00	34 – 14
	34 – 29
	37 – 14
	37 – 29
1UY–25926–51	34 – 12
	34 – 27
	37 – 12
	37 – 27
3GD–25933–00	37 – 17
	37 – 32
5DH–25933–00	34 – 17
	34 – 32
1UY–25937–51	34 – 8
	34 – 23
	37 – 8
	37 – 23
1UY–25938–51	34 – 13
	34 – 28
	37 – 13
	37 – 28
3JD–25961–00	34 – 15
	34 – 30
	37 – 15
	37 – 30
1NV–26129–00	38 – 15
3B4–26168–10	40 – 13
3B4–26232–01	21 – 55
1HP–26250–00	38 – 5
28P–2625G–00	38 – 7
1NV–2625K–00	38 – 17
28P–2628F–00	38 – 6
28P–2628G–00	38 – 14
1NV–26304–00	38 – 13
3B4–26311–20	38 – 25
3B4–26341–00	38 – 26
3B4–26347–00	38 – 27
3B4–26372–00	40 – 14
3B4–2637F–10	38 – 24
1NV–26398–00	38 – 16
1NV–2811A–01	20 – 20
3B4–28307–00	21 – 27
3B4–28349–00	21 – 37
3B4–2837N–00	21 – 34
3B4–2837R–00	21 – 35
3B4–2838M–00	21 – 18
3B4–2839N–00	21 – 23
3B4–2845L–00	21 – 21
3B4–28487–00	21 – 28

PART NO.	REF. NO.
1HP–46101–00	26 – 1
3B4–46117–00	27 – 7
3B4–46117–10	27 – 7
3B4–46117–20	27 – 7
3B4–46117–30	27 – 7
3B4–46119–00	26 – 17
3B4–46119–10	26 – 17
3B4–46119–20	26 – 17
3B4–46119–30	26 – 17
3B4–46119–40	26 – 17
3B4–46119–50	26 – 17
5KM–46126–00	26 – 39
	27 – 33
3B4–46126–10	26 – 11
2HR–46127–00–25	26 – 14
2HR–46127–00–30	26 – 14
2HR–46127–00–35	26 – 14
2HR–46127–00–40	26 – 14
2HR–46127–00–45	26 – 14
2HR–46127–00–50	26 – 14
3B4–46129–00	26 – 5
3B4–46134–00	27 – 11
3B4–46135–00	27 – 12
5KM–46136–00	26 – 42
	27 – 31
5KM–46137–00	26 – 41
	27 – 30
3B4–46141–00	27 – 4
3B4–46142–00	27 – 21
3B4–46144–00	26 – 8
4WV–46145–10	27 – 22
3B4–46151–00	26 – 2
3B4–46152–00	26 – 24
1HP–46160–00	27 – 1
3B4–46161–00	27 – 3
3B4–46162–01	27 – 2
3B4–46163–00	27 – 14
3B4–46164–00	27 – 9
3B4–46166–00	27 – 10
1HP–4616A–00	27 – 16
3B4–461A0–00	26 – 7
3B4–4621F–00	26 – 19
3B4–4621F–10	26 – 19
3B4–4621F–20	26 – 19
3B4–4621F–30	26 – 19
5GH–46293–00	27 – 23
3B4–46316–00	26 – 15
3B4–4631A–01	26 – 32

PART NO.	REF. NO.
3B4–46326–00	26 – 20
3B4–46344–00	26 – 35
3B4–46344–10	26 – 35
3B4–46344–20	26 – 35
3B4–46344–30	26 – 35
3B4–46344–40	26 – 35
3B4–46344–50	26 – 35
3B4–46470–02	27 – 6
5KM–46559–00	26 – 45
	27 – 35
3B4–47359–00	27 – 15
3B4–67839–10	27 – 5
4D9–81168–00	48 – 15
28P–81410–01	43 – 1
28P–81450–01	43 – 2
5KM–81677–00	40 – 25
28P–81815–00	44 – 7
28P–81826–00	44 – 6
4XV–8182A–00	44 – 9
4B5–81840–00	44 – 2
11H–81844–00	44 – 5
1FK–81847–00	44 – 4
3TB–81847–00	44 – 3
4B5–81871–00	44 – 8
28P–81890–00	44 – 1
3B4–81940–00	48 – 26
5DM–81950–00	48 – 39
8FP–81950–01	48 – 40
1D7–81960–00	48 – 17
3WP–81980–00	48 – 38
34D–82116–00	48 – 25
3B4–82122–00	21 – 44
1S3–82123–00	13 – 37
	23 – 17
3B4–82129–00	48 – 21
3B4–82133–10	48 – 23
5PS–82151–00	48 – 37
5JJ–82151–20	48 – 35
5JJ–82151–30	48 – 34
5JJ–82151–90	48 – 36
4GB–82180–00	48 – 32
1D7–82310–01	48 – 4
3B4–8233W–10	21 – 43
28P–82370–00	48 – 6
1C7–82380–00	10 – 7
28P–82510–00	48 – 28
1HP–82530–00	40 – 12
3B4–82540–01	48 – 9

PART NO.	REF. NO.
3GB–82540–01	48 – 7
4GB–82560–00	48 – 33
3HN–82569–00	48 – 29
3B4–82576–00	48 – 52
3HN–82579–00	48 – 30
1HP–82590–00	48 – 31
1S3–82913–00	38 – 21
1HP–83500–00	45 – 1
3B4–83755–00	48 – 14
3B4–83912–00	40 – 7
3B4–83922–00	39 – 7
437–83936–01	48 – 44
28P–83972–00	38 – 32
1HP–83976–09	38 – 18
1HP–83980–00	39 – 12
28P–84300–00	46 – 1
28P–84314–00	46 – 2
2GU–84334–00	46 – 6
3B4–84340–00	46 – 3
5GH–84703–10	46 – 7
3FA–84710–00	47 – 1
1A2–84714–41	47 – 2
8CC–85790–01	48 – 12
3B4–85885–00	10 – 10
8FP–85886–00	9 – 13
1HP–8591A–00	48 – 1
3B4–859A0–10	48 – 50
1HP–E2405–00	7 – 13
1HP–E240A–00	7 – 12
1HP–E2462–00	7 – 16
1HP–E2535–00	7 – 14
1HP–E2576–00	7 – 1
1HP–E2578–00	7 – 3
1HP–E2675–00	7 – 15
1HP–E4451–00	9 – 7
1HP–E4462–00	9 – 12
1HP–E4472–00	9 – 8
1HP–E4611–00	11 – 1
1HP–E4627–00	11 – 2
1HP–E4703–00	11 – 18
1HP–E4714–00	11 – 4
1HP–E4718–00	11 – 23
1HP–E471C–00	11 – 25
1HP–E472C–00	11 – 26
1HP–E4733–00	11 – 30
1HP–E4752–00	11 – 19
1HP–E4755–00	11 – 22
1HP–E4758–00	11 – 14

PART NO.	REF. NO.
1HP–E477U–00	11 – 29
1HP–E5471–00	13 – 32
1HP–E5472–00	13 – 35
1HP–E5473–00	13 – 36
1HP–E5474–00	13 – 39
1HP–F1110–00	20 – 1
1HP–F147A–00	20 – 21
1HP–F147E–00	20 – 24
1HP–F147F–00	20 – 26
1HP–F1500–50	21 – 1
1HP–F1501–00	21 – 9
1HP–F151B–00	21 – 26
5ND–F151E–00	50 – 7
37S–F151F–U0	50 – 8
37S–F151K–00	50 – 13
4XE–F1539–10	50 – 2
	50 – 5
	50 – 11
5UG–F153A–30	49 – 3
	49 – 4
4XE–F1549–00	50 – 3
	50 – 6
	50 – 12
1HP–F1552–00	21 – 56
1HP–F1553–00	21 – 60
5ND–F1558–00	50 – 15
4XE–F1568–00	50 – 1
1HP–F1575–00	21 – 57
1HP–F1600–50	22 – 1
1HP–F160E–00	22 – 8
1HP–F160F–00	22 – 12
1HP–F1651–00	22 – 6
1HP–F1669–00	22 – 13
1HP–F171A–00	23 – 8
1HP–F1735–00	41 – 10
1HP–F174T–00	23 – 23
5FU–F175B–01	21 – 52
1HP–F176E–00	23 – 7
1HP–F177B–00	23 – 10
1HP–F1788–10	49 – 1
	49 – 2
1HP–F17E0–00	23 – 13
1HP–F17F0–00	23 – 22
1HP–F1871–00	23 – 1
1HP–F2128–00	24 – 18
1HP–F2129–00	24 – 21
1HP–F2171–00	24 – 1
1HP–F2172–00	24 – 5

PART NO.	REF. NO.
1HP–F217M–00	24 – 9
1HP–F217N–00	24 – 13
1HP–F2210–01	25 – 1
1HP–F2259–01	25 – 2
1HP–F2517–00	28 – 4
1HP–F2875–00	41 – 6
1HP–F3123–00	29 – 24
1HP–F3133–00	29 – 25
1HP–F3350–00	29 – 21
1HP–F3391–00	21 – 51
1HP–F3501–00	32 – 7
1HP–F3502–00	33 – 7
1HP–F3526–00	24 – 2
	24 – 6
	24 – 10
	24 – 14
	29 – 2
	29 – 6
	29 – 12
	29 – 15
1HP–F3540–00	29 – 1
1HP–F3550–00	29 – 5
1HP–F3570–00	29 – 11
1HP–F3580–00	29 – 14
37S–F3812–00	28 – 6
1HP–F3813–00	28 – 3
1HP–F3816–00	28 – 24
1HP–F3868–00	28 – 8
1HP–F386G–00	25 – 11
1HP–F386H–00	25 – 12
1HP–F38B6–00	28 – 20
1HP–F4110–00	30 – 1
1HP–F4129–00	30 – 20
1HP–F4141–00	30 – 26
1HP–F414H–00	23 – 30
1HP–F414J–00	30 – 22
1HP–F414K–00	30 – 23
1HP–F416G–00	30 – 27
1HP–F4181–00	30 – 25
1HP–F4312–00	30 – 7
1HP–F470F–00	31 – 2
1HP–F4710–00	31 – 1
1HP–F4725–00	31 – 4
4XE–F4747–00	31 – 3
1HP–F4821–00	42 – 19
1HP–F4822–00	42 – 21
1HP–F482J–00	42 – 25
1HP–F482K–00	42 – 27

PART NO.	REF. NO.
1HP–F4841–00	42 – 17
1HP–F4842–00	42 – 23
1HP–F4877–U0	50 – 9
1HP–F4897–00	50 – 14
1HP–F512A–00	32 – 28
	33 – 28
	35 – 35
	36 – 35
1HP–F5180–10	32 – 1
	33 – 1
1HP–F530F–00	35 – 7
1HP–F532F–00	36 – 7
1HP–F5390–10	35 – 1
	36 – 1
1HP–F582T–00	34 – 1
	34 – 3
1HP–F582V–00	37 – 1
	37 – 3
1HP–F5871–00	39 – 18
1HP–F5872–00	39 – 15
	40 – 17
1HP–F5873–00	39 – 17
1HP–F5874–00	40 – 23
1HP–F5882–00	40 – 24
1HP–F588F–00	40 – 27
1HP–F6111–00	38 – 1
1HP–F6124–00	38 – 3
5FU–F6241–10	38 – 2
1HP–F7211–00	40 – 29
1HP–F7414–00	11 – 21
5UH–F741A–10	41 – 7
	41 – 17
1HP–F7452–00	41 – 1
1HP–F7453–00	41 – 4
1HP–F7462–00	41 – 2
1HP–F7463–00	41 – 16
1HP–F8100–00	20 – 19
1P0–F816L–00	50 – 4
1HP–F816M–U0	50 – 10
4XE–F819R–20	50 – 16
1HP–F8239–00	41 – 9
1HP–F8309–00	21 – 30
1HP–F8313–00	21 – 54
1HP–F837L–00	21 – 48
1HP–F838K–00	21 – 17
1HP–F842M–00	42 – 6
1HP–F842N–00	42 – 11
1HP–F845N–00	42 – 4

PART NO.	REF. NO.
1HP–F8488–00	20 – 28
1HP–G6172–00	26 – 37
1HP–G6173–00	27 – 28
1HP–G7491–00	25 – 6
5FU–H2100–20	48 – 19
1HP–H2128–00	48 – 20
1HP–H212B–00	21 – 38
1HP–H2176–00	21 – 45
1HP–H253E–00	21 – 40
1HP–H253F–00	21 – 41
1HP–H254B–00	48 – 41
1HP–H254E–00	21 – 42
5D3–W0041–00	39 – 2
	40 – 2
3B4–W0045–00	34 – 16
3B4–W0045–10	34 – 31
3B4–W0046–00	37 – 16
3B4–W0046–10	37 – 31
3B4–W0047–00	34 – 7
	34 – 22
	37 – 7
	37 – 22
1UY–W0048–50	34 – 11
	34 – 26
	37 – 11
	37 – 26
3B4–W0057–00	34 – 6
	34 – 21
3B4–W0057–20	37 – 6
	37 – 21
90105–06078	5 – 8
90105–06082	5 – 14
	8 – 13
	12 – 16
90105–06176	19 – 16
90105–06639	20 – 7
	20 – 8
90105–06832	42 – 7
	42 – 12
90105–07006	5 – 5
	5 – 10
90105–08153	28 – 22
90105–08161	34 – 19
	34 – 34
	37 – 19
	37 – 34
90105–10131	25 – 3
	29 – 22

PART NO.	REF. NO.
90105–10204	28 – 5
	28 – 13
90105–10212	35 – 19
	36 – 19
90105–10219	20 – 9
90105–10222	24 – 3
	24 – 7
	24 – 11
	24 – 15
	29 – 19
90105–10237	20 – 12
90105–10238	20 – 14
90105–14003	18 – 19
90109–06172	19 – 30
	21 – 3
	21 – 11
	21 – 33
	24 – 25
	28 – 21
	30 – 21
	40 – 28
	41 – 11
	41 – 19
90109–06202	20 – 22
	20 – 27
90109–06214	20 – 23
	20 – 25
90109–08101	34 – 2
	34 – 4
	37 – 2
	37 – 4
90109–09002	1 – 6
90109–09003	1 – 5
90109–09005	1 – 7
90109–14002	18 – 25
90110–08091	17 – 7
90111–06137	41 – 13
	41 – 21
90111–06814	24 – 19
	24 – 22
	29 – 26
	41 – 12
	41 – 20
90114–10014	32 – 6
	33 – 6
	35 – 6
	36 – 6
90119–05193	21 – 4

PART NO.	REF. NO.
90119–05193	21 – 32
90119–06137	48 – 11
90119–06152	21 – 39
	21 – 49
	21 – 58
	21 – 61
	22 – 4
	22 – 5
	22 – 10
	23 – 6
	23 – 29
	42 – 1
	42 – 2
	42 – 3
90119–08106	28 – 18
90119–08118	42 – 20
	42 – 22
90119–10023	2 – 3
90119–10044	42 – 26
	42 – 28
90149–04278	38 – 8
90149–05016	18 – 11
90149–05034	21 – 6
	21 – 14
90149–06117	32 – 13
	33 – 13
	35 – 16
	36 – 16
90149–08013	17 – 4
90149–08049	14 – 8
90154–05021	46 – 10
90157–04006	15 – 23
90159–05044	46 – 8
90164–05800	21 – 29
90167–06800	42 – 8
	42 – 13
90170–06024	40 – 9
90170–06128	4 – 12
90170–06228	19 – 18
90170–10010	28 – 32
90170–18003	3 – 27
90170–36279	15 – 37
90171–10001	28 – 33
	29 – 9
90171–12001	29 – 17
90179–05523	21 – 22
	42 – 10
	42 – 15

PART NO.	REF. NO.
90179–10020	32 – 4
	33 – 4
	35 – 4
	36 – 4
90179–12005	26 – 13
90179–16004	3 – 14
90179–16005	15 – 28
	15 – 38
90179–16006	17 – 16
	17 – 24
90179–20016	32 – 27
	33 – 27
	35 – 34
	36 – 34
90179–22013	17 – 6
90179–22021	15 – 10
90179–55660	17 – 25
90179–60001	17 – 11
90183–05008	21 – 47
	46 – 9
90183–051A0	21 – 5
90183–06053	21 – 8
	21 – 16
	21 – 46
	21 – 59
	21 – 62
	22 – 3
	22 – 11
	23 – 20
	23 – 25
	30 – 11
90183–06819	11 – 3
90183–080A1	19 – 22
90185–10011	20 – 4
	20 – 10
	20 – 15
90185–10012	24 – 17
	25 – 4
	29 – 20
	29 – 23
	35 – 20
	36 – 20
90185–22008	28 – 15
90201–04027	35 – 15
	36 – 15
90201–047R9	15 – 24
90201–05015	11 – 17
90201–05039	45 – 3

PART NO.	REF. NO.
90201–05825	11 – 8
90201–06019	11 – 7
90201–06036	19 – 5
	19 – 15
	19 – 25
90201–06076	11 – 6
90201–06078	41 – 14
	41 – 22
90201–06081	11 – 10
90201–06097	47 – 3
90201–08048	28 – 23
90201–08087	26 – 33
90201–10035	20 – 11
	20 – 13
	20 – 16
	25 – 5
	25 – 10
90201–10118	39 – 21
	40 – 21
90201–12029	26 – 12
90201–127J6	18 – 23
90201–132G5	19 – 3
90201–14023	40 – 31
90201–15029	16 – 27
90201–16013	3 – 13
90201–16021	17 – 15
	17 – 23
	28 – 25
90201–170U8	16 – 22
90201–190T7	15 – 27
90201–20028	16 – 19
90201–25290	16 – 9
90201–25634	26 – 4
90201–286K9	14 – 2
90209–06012	7 – 19
90209–10229	28 – 34
90214–22007	16 – 16
90215–10008	8 – 10
90215–18001	3 – 28
90240–06076	38 – 29
90240–08013	40 – 15
90267–47187	35 – 14
	36 – 14
90267–489U9	41 – 8
	41 – 18
90269–05055	19 – 28
90269–06081	23 – 28
90269–07010	21 – 31
90269–07010	21 – 53
	22 – 7
	23 – 31
90269–07012	21 – 12
	21 – 13
	23 – 27
	42 – 9
	42 – 14
90269–07077	21 – 36
90280–05001	3 – 12
90282–05013	3 – 25
90338–08174	9 – 19
90338–08226	48 – 2
90338–09130	22 – 9
90338–18122	42 – 16
90340–10001	27 – 17
90340–14002	26 – 25
90340–14016	13 – 12
90340–14029	26 – 26
	27 – 24
90340–14132	8 – 4
90340–36004	13 – 10
90380–10002	14 – 6
90381–17067	35 – 10
	36 – 10
90387–06113	7 – 20
90387–0613B	19 – 2
90387–066J1	30 – 15
90387–07021	30 – 18
90387–08083	11 – 12
90387–090R0	28 – 11
90387–15018	16 – 29
90387–20021	16 – 21
90387–22014	28 – 14
90387–22591	28 – 16
90387–24001	3 – 26
90387–250R3	16 – 14
90387–26001	16 – 4
90401–08004	1 – 22
90401–08006	8 – 23
90401–10015	39 – 20
	40 – 20
90401–10024	8 – 17
90401–14118	8 – 15
90401–20008	8 – 7
90430–06014	6 – 19
	7 – 7
90430–08119	1 – 23
90430–08119	8 – 24
90430–10003	27 – 18
90430–10148	48 – 8
90430–10188	8 – 18
90430–12202	48 – 13
90430–14043	8 – 16
	18 – 27
90430–14194	18 – 20
90445–070F1	27 – 26
90445–07340	6 – 20
90445–074F6	26 – 43
90445–08840	23 – 4
90445–08841	23 – 3
90445–09220	47 – 5
90445–09825	30 – 12
90450–32015	6 – 5
90450–45806	11 – 28
90450–59006	9 – 20
90450–72004	9 – 2
	9 – 3
90450–99805	11 – 24
90460–85135	13 – 34
	13 – 40
90462–08049	12 – 7
90462–08055	13 – 31
90462–16003	12 – 6
90464–09013	48 – 57
90464–10112	48 – 48
90464–12001	13 – 5
90464–12045	48 – 58
90464–14004	30 – 30
90464–14800	48 – 59
90464–15157	23 – 32
	48 – 45
90464–15195	48 – 42
90464–16006	40 – 19
90464–16012	48 – 60
90464–20010	39 – 19
90464–20181	48 – 46
90464–20237	48 – 55
90464–24230	48 – 56
90464–31827	48 – 47
90464–40825	20 – 18
	48 – 43
90467–07029	26 – 44
	27 – 27
90467–07093	6 – 21
90467–08003	23 – 5
90467–09006	30 – 8
	30 – 13
90467–100A1	9 – 18
90467–140A4	1 – 21
90467–150A2	1 – 24
90467–220A1	9 – 16
90467–26189	7 – 2
	7 – 4
90480–01400	30 – 17
90480–01558	23 – 9
90480–13004	21 – 19
90480–13018	13 – 28
90480–13398	13 – 38
	21 – 7
	21 – 15
90480–13567	13 – 33
	21 – 50
90480–15235	7 – 17
90480–17001	11 – 11
90480–18290	30 – 14
90501–05764	46 – 5
90501–06022	18 – 8
90501–08665	38 – 28
90501–090A1	18 – 28
90501–10353	18 – 18
90501–140A2	18 – 15
90501–20361	26 – 36
	27 – 29
90501–220A1	3 – 9
90501–650A0	15 – 34
90506–20014	40 – 32
90506–30006	11 – 13
90508–32117	19 – 4
90508–32132	18 – 3
90560–20040	18 – 5
91312–04006	10 – 14
91312–05014	13 – 9
	43 – 4
91312–06012	6 – 2
	8 – 19
	12 – 14
91312–06020	6 – 7
	48 – 16
91312–06025	5 – 16
91312–06030	1 – 8
91312–06040	2 – 4
91312–08040	12 – 10
91401–16012	38 – 4
91401–20012	38 – 31
91401–20020	28 – 35
	29 – 10
91402–20025	28 – 27
91490–25020	29 – 18
91A20–07020	9 – 17
92012–06012	11 – 15
92012–06014	11 – 5
92012–06016	11 – 9
92012–06030	43 – 3
92502–06010	10 – 8
92902–04600	38 – 20
	39 – 14
92902–05600	21 – 25
	38 – 23
	48 – 54
92902–06200	11 – 16
92902–08600	17 – 19
	40 – 16
92907–06200	38 – 30
93101–10090	6 – 14
93101–12168	13 – 23
93101–35001	15 – 16
93102–15212	19 – 11
93102–30010	17 – 13
	17 – 26
93102–35004	15 – 5
93102–35380	26 – 9
	26 – 23
93102–42004	16 – 6
93104–09025	38 – 12
93104–41119	15 – 31
93105–46001	27 – 13
93112–31800	28 – 7
93210–10096	8 – 21
93210–14369	13 – 13
93210–16325	12 – 3
93210–21190	6 – 3
93210–21631	12 – 13
93210–26001	16 – 5
93210–29196	48 – 10
93210–33786	6 – 8
93210–357A3	13 – 11
93210–41042	7 – 11
93210–44545	15 – 32
93210–626A7	26 – 10
93210–78544	1 – 18
	17 – 17
93210–96601	1 – 14
93211–594A4	15 – 21
93305–00602	32 – 8
	33 – 8
	35 – 8
	36 – 8
93306–00006	6 – 12
93306–00401	16 – 2
93306–00613	27 – 8
93306–00704	26 – 21
93306–07209	5 – 6
93306–07801	16 – 3
93306–20103	13 – 22
93306–20309	16 – 24
93306–20483	16 – 23
93306–205U0	26 – 16
93306–20654	17 – 12
93306–207U0	26 – 22
93306–30438	3 – 30
	16 – 31
93306–30534	3 – 29
	26 – 18
93306–30537	17 – 2
93306–30810	3 – 15
93306–37206	17 – 10
93310–31576	16 – 28
93310–32590	16 – 10
93310–84017	3 – 5
93315–21813	15 – 8
93316–01003	15 – 4
93332–00046	26 – 3
93332–00053	26 – 6
93410–20038	18 – 6
93410–22039	26 – 40
	27 – 34
93410–46079	15 – 7
93440–25084	16 – 12
	16 – 17
93450–22119	32 – 26
	33 – 26
93450–24154	3 – 19
93503–08007	18 – 17
93604–10011	6 – 22
93604–18100	18 – 7
93606–09002	3 – 10
93612–16254	1 – 10
93700–06004	35 – 11
	36 – 11

PART NO.	REF. NO.
93900–00813	32 – 3
	33 – 3
	35 – 3
	36 – 3
94108–12817	32 – 2
	33 – 2
94110–12814	35 – 2
	36 – 2
94580–31074	8 – 11
94591–57126	5 – 11
94701–00423	1 – 9
95022–06008	11 – 20
	48 – 27
95022–06010	6 – 18
	7 – 8
95022–06012	1 – 15
95022–06016	13 – 25
95022–06020	1 – 16
	1 – 19
	7 – 9
	19 – 13
95022–06030	6 – 11
	12 – 8
	13 – 6
	15 – 13
	44 – 10
95022–06040	8 – 3
	15 – 14
95022–06045	7 – 10
95022–06050	6 – 23
	13 – 7
95022–06060	12 – 9
95022–08012	26 – 34
95302–05800	45 – 2
95302–06600	40 – 34
95302–06800	30 – 5
95302–10700	28 – 31
95307–05700	38 – 11
95312–06700	19 – 19
95312–10600	8 – 9
95602–05100	38 – 10
95602–10200	25 – 9
95612–08625	1 – 3
95612–16100	28 – 26
95701–06500	39 – 9
95702–06300	24 – 20
	24 – 23
	29 – 27

PART NO.	REF. NO.
95702–06300	41 – 15
	41 – 23
	47 – 4
95702–06500	48 – 24
95702–08500	11 – 34
95802–06030	30 – 16
	30 – 19
95812–06012	20 – 30
	39 – 24
	39 – 26
95812–06014	27 – 19
95812–06016	19 – 26
95812–06020	7 – 18
	48 – 18
95812–06025	39 – 22
	40 – 22
95812–06035	19 – 6
95812–08012	41 – 3
95812–08014	25 – 13
	42 – 5
	42 – 18
	42 – 24
95812–08030	28 – 2
95812–08040	11 – 32
	27 – 20
95812–10035	20 – 5
	20 – 6
	20 – 29
95822–06020	13 – 30
95822–06030	13 – 17
	13 – 20
95822–06040	13 – 21
95822–08012	11 – 31
95822–08025	26 – 31
95822–08035	26 – 30
97002–05016	48 – 53
97002–06016	30 – 10
	48 – 5
97022–06014	40 – 33
97022–08030	17 – 18
97022–08060	28 – 9
97702–50520	9 – 14
97702–60025	48 – 3
98502–03530	46 – 4
98502–04012	39 – 13
98502–04016	38 – 19
98502–05016	21 – 24
98502–05020	38 – 22

PART NO.	REF. NO.
98502–06012	10 – 12
	11 – 27
98507–05010	10 – 9
98507–05020	38 – 9
98702–04012	39 – 3
	40 – 3
98902–06020	48 – 51
99001–10600	40 – 30
99009–10400	6 – 16
99009–12400	18 – 16
	18 – 24
99009–19400	26 – 38
	27 – 32
99009–30400	29 – 4
	29 – 8
	32 – 11
	33 – 11
99009–35400	3 – 11
99009–55500	32 – 9
	33 – 9
	35 – 9
	36 – 9
99009–80500	15 – 6
99530–08012	19 – 14
99530–10014	26 – 29
99530–10116	12 – 4
	13 – 3
	13 – 19
	15 – 12
99530–14016	12 – 17

PART NO.	REF. NO.

PART NO.	REF. NO.

PART NO.	REF. NO.